ARCEUS ELECTRIC COMBI BOILER

ARCEUS
6-9-12-15-18-24-27 kW MT / CH / ST

USER AND INSTALLATION MANUAL

Building Regulations and the Benchmark Commissioning Checklist
Building Regulations (England & Wales) require notification of the installation of a heating appliance to the relevant Local Authority Building Control Department. This can be achieved via a Competent Persons Self Certification Scheme as an option to notifying the Local Authority directly.

This company is a member of the Benchmark initiative and fully supports the aims of the programme. Its aim is to improve the standards of installation and commissioning of central heating systems in the UK and to encourage the regular servicing of all central heating systems to ensure safety and efficiency. Building Regulations require that installations should comply with manufacturer's instructions. It is therefore important that the commissioning checklist is completed by the installer. The relevant section of Building Regulations only relates to dwellings. Therefore the checklist only applies if the boiler is being installed in a dwelling or some related structure.

Benchmark places responsibilities on both manufacturers and installers. The purpose is to ensure that customers are provided with the correct equipment for their needs, that it is installed, commissioned and serviced in accordance with the manufacturer's instructions by authorized engineer and that it meets the requirements of the appropriate Building Regulations. The Benchmark Checklist can be used to demonstrate compliance with Building Regulations and should be provided to the customer for future reference.

Installers are required to carry out installation, commissioning and servicing work in accordance with the Benchmark Code of Practice which is available from the Heating and Hotwater Industry Council who manage and promote the scheme.

Visit **centralheating.co.uk** or **installersfirst.co.uk** for more information

PRODUCT NAME	PRODUCT CODE
ARCEUS EK 12 MT ERP UK	8116270010
ARCEUS EK 15 MT ERP UK	8116271010
ARCEUS EK 18 MT ERP UK	8116272010
ARCEUS EK 24 MT ERP UK	8116273010
ARCEUS EK 27 MT ERP UK	8116274010
ARCEUS EK 6 CH ERP UK	8116275010
ARCEUS EK 9 CH ERP UK	8116276010
ARCEUS EK 12 CH ERP UK	8116277010
ARCEUS EK 15 CH ERP UK	8116278010
ARCEUS EK 18 CH ERP UK	8116279010
ARCEUS EK 24 CH ERP UK	8116280010
ARCEUS EK 27 CH ERP UK	8116281010
ARCEUS EK 6 ST ERP UK	8116282010
ARCEUS EK 9 ST ERP UK	8116283010
ARCEUS EK 12 ST ERP UK	8116284010
ARCEUS EK 15 ST ERP UK	8116285010
ARCEUS EK 18 ST ERP UK	8116286010
ARCEUS EK 24 ST ERP UK	8116287010
ARCEUS EK 27 ST ERP UK	8116288010

Table 1. Product Definition and Codes

INDEX

1-INTRODUCTION

First of all, we would like to thank you for choosing E.C.A brand. E.C.A. Confeo Premix condensing boilers have been designed to meet for an efficient, safe and comfortable central heating and hot water requirement.

MT Model (Boiler) : Both Central Heating (CH) and Domestic Hot Water (DHW).
CH Model (Heat Only) : Only for Central Heating (CH).
ST Model (System Boiler) : Both for Central Heating (CH) and Domestic Hot Water (DHW) with external storage tank (not included).

The assembly and usage information of 6/9 ST-CH and 12/15/18/24/27 MT-ST-CH ARCEUS electric boilers are available in this manual. Detailed information have been provided in the guide regarding the technical specification of the boiler, selection of the boiler location, fitting its water, electric supply connections, maintenance information and solving of possible failures. Please carefully read the manual in order to benefit from all the features of your boiler.

The Benchmark Checklist and Service Record Card are located at the back of the Operating Manual.

The Benchmark Checklist must be filled by authorized engineer during installation. Operating Manual and Service Manual must be handed over the user for future operations.
Service Record Card must be filled by authorized engineer and handed over the user after each service operation and annual maintanence.

1.1 Installer's Responsibility

The installer is responsible for the installation and initial start-up of the boiler. Instructions are given below.

- ✓ Check Operating and Service manuals and follow instructions before installation.
- ✓ Carry out installation in compliance with the prevailing legislation and standarts.
- ✓ Be sure that the system is flushed and inhibitor added.
- ✓ Only authorized engineer must operate the boiler.
- ✓ Explain the user about installation and operation of boiler.
- ✓ Fill the Comissioning Checklist.
- ✓ Give all Operating and Service manuals to user.
- ✓ The warranty certificate must be registered by authorized engineer within 30 days after installation.

2-DEFINITION OF SYMBOLS

SYMBOL	DEFINITION	SYMBOL	DEFINITION
	Domestic Hot Water	Ø	Diameter
	Flame		Parameter Adjustment
RESET	Reset	**DHW**	Domestic Hot Water
	Winter Mode	**NTC**	Negative Temperature Coefficient (sensor)
	Summer Mode	**RCD**	Residual Current Device
ECO	ECO Mode	**ECV**	Emergency ControlValve
COMFORT	Comfort Mode		

Table 2. Definition of Symbols and Abbreviation

SYMBOL	DEFINITION
	Indicates that the situation that can only be interfered by authorized engineer .
Information	Explanation containing information that should be considered by the user.
	CAUTION: It means that you may suffer from material damage or slight personal injury. **DANGER:** It means that you may suffer from sever personal injury.

Table 3. Definition of Symbols

3-SAFETY RULES AND WARNINGS

3.1 Water Systems

✓ Before installation of the boiler and the water systems (CH & DHW circuit) must be completed in accordance with the relevant regulations and standards by installer.

3.2 Installation

✓ The boiler must be installed in accordance with national and local requirements, relevant standarts and this manual by authorized engineer.
✓ The boiler must be mounted against a closed wall.
✓ The boiler can not be positioned having direct contact to steam, detergent or gases.
✓ Any change of flue position must not be made without consulting authorized engineer.
✓ Sunlight can cause color change on the exterior of your boiler over time.
✓ The boiler must be installed in indoor spaces under normal conditions. However, it can be operated in a suitable cabinet in places such as garage, open balcony. Please consult E.C.A for proper cabine sizes.
✓ If boiler is located in an unheated area, it must be connected to mains, switched on, and pressure of installation should be within operation range so that freeze protection would be activated. Even if boiler is OFF position, freeze protection stays activated.

3.3 Boiler Start Up

✓ Boiler start up must be performed certainly by authorized engineer.
✓ Maximum DHW operating water pressure (bar) and electricity supply voltage on the information plate must be suitable with mains supply conditions. This is checked by an authorized engineer.

✓ After boiler start up, you should request information about operating the boiler and safety precautions from authorized engineer.

3.4 Usage and Maintenance

✓ Read carefully instructions and precautions in this manual against wrong usage which causes unsafe conditions.
✓ The boiler should be checked and serviced for general maintenance once a year. Maintenance and service operations must be carried out only authorized engineer.
✓ Only a damp cloth should be used for cleaning the outer surface of the boiler and then the surfaces should be dried completely. Do not use chemical substances or solutions which cause rust and scratches in your boiler.

CAUTION: This boiler is not intended for use by persons (including children) who are low physical or sensory and mental capacity and inexperienced persons without informing and supervising the use of the boiler by responsible persons. Ensure that children under 8 years do not play with the boiler.

CAUTION: If boiler is used incorrectly or for other than its intended use, it may present a life hazard and may cause material damage to the product and its surroundings.

CAUTION: The boiler must be transported and lifted by at least 2 people due to heavy weight.

4-REGULATIONS

Installation regulations

Current Safety (Installation & Use) Regulations:
All appliances must be installed by a competent person in accordance with the below regulations.

British standards

Where no specific instruction is given, reference should be made to the relevant British Standard codes of Practice.
BS 5449 Forced circulation hot water systems
BS 5546 Installation of hot water supplies for domestic purposes
BS 6700 Design, installation, testing and maintenance of services supplying water
BS 7074 Application, selection and installation of expansion vessels and ancillary equipment for sealed water systems.
BS 7593 Code of Practice for treatment of water in heating systems
BS 7671 Requirements for electrical installations, IEE Wiring Regulations

• ECTI National rules for electrical installations

Potable Water

All seals, joints and compounds (including flux and solder) and components used as part of the secondary domestic water system must be approved by WRAS.

CH Water

Artificially softened water must not be used to fill the central heating system.

5-USEFUL INFORMATION ON PRODUCT

5.1 Efficient Use of the Combi Boiler in Terms of Safety and Energy Consumption

Isolation of your building is extremely important. Energy saving is achieved at a considerable degree since the heat loss is lowest in houses with double-glazed windows and insulated walls.

✓ The use of thermostatic valves in your radiators ensures that the room temperature is constant or allows you to save money.
✓ Turning radiator valves lower levels in the rooms which will not be used for a long time and keeping the doors closed keeps fuel consumption low.
✓ If you use the program clock with your boiler, the combi boiler operates at the times you set and consumes less fuel.
✓ If you use your boiler with room thermostat, it keeps the boiler temperature at the level you set and thus allows less fuel consumption.
✓ Covering the radiator top and sides with furniture-like things negatively affects hot air circulation, thus prevents the environment from overheating and increases fuel consumption.
✓ If you will leave your boiler in operation late at night, keeping water temperature of the heating circuit at low levels will ensure saving.
✓ If you feel that the room temperature is high, the radiator valves should be closed instead of opening windows.

5.2 Clogging in Installation

✓ In old installations with iron pipes, usually clogging occurs short time after the boiler is commissioned.
✓ If clogging in installation is encountered with, then inhibitor (Sentinel or Fernox etc.) should be added to installation water.
✓ For further information visit www.fernox.com or www.sentinel-solutions.net

5.3 Cleaning of Boiler

Keep the outer casing of the combi boiler clean by wiping it with a soft damped cloth. Do not use strong, abrasive cleaning agents.

Performing the maintenance once a year during the warranty period and periodically before the winter season after the warranty expires ensures safe use, saves fuel and extends the useful life of the boiler.

Make sure periodic maintenance is strictly performed by authorized engineer.

Use original spares parts only to ensure maximum life span and safety of the boiler.

E.C.A will not be responsible for damages to boiler or material or living beings nearby caused by maintenance performed by unauthorized service or staff.

6-PRODUCT INFORMATION

6.1 Packaging

CAUTION: Attention must be paid to warning on packaging regarding handling and storage.

✓ The boiler is delivered with a cartonboard with dimensions of 735 x 345 x 490 (HxWxD) mm, supported by upper and lower styrofoams.

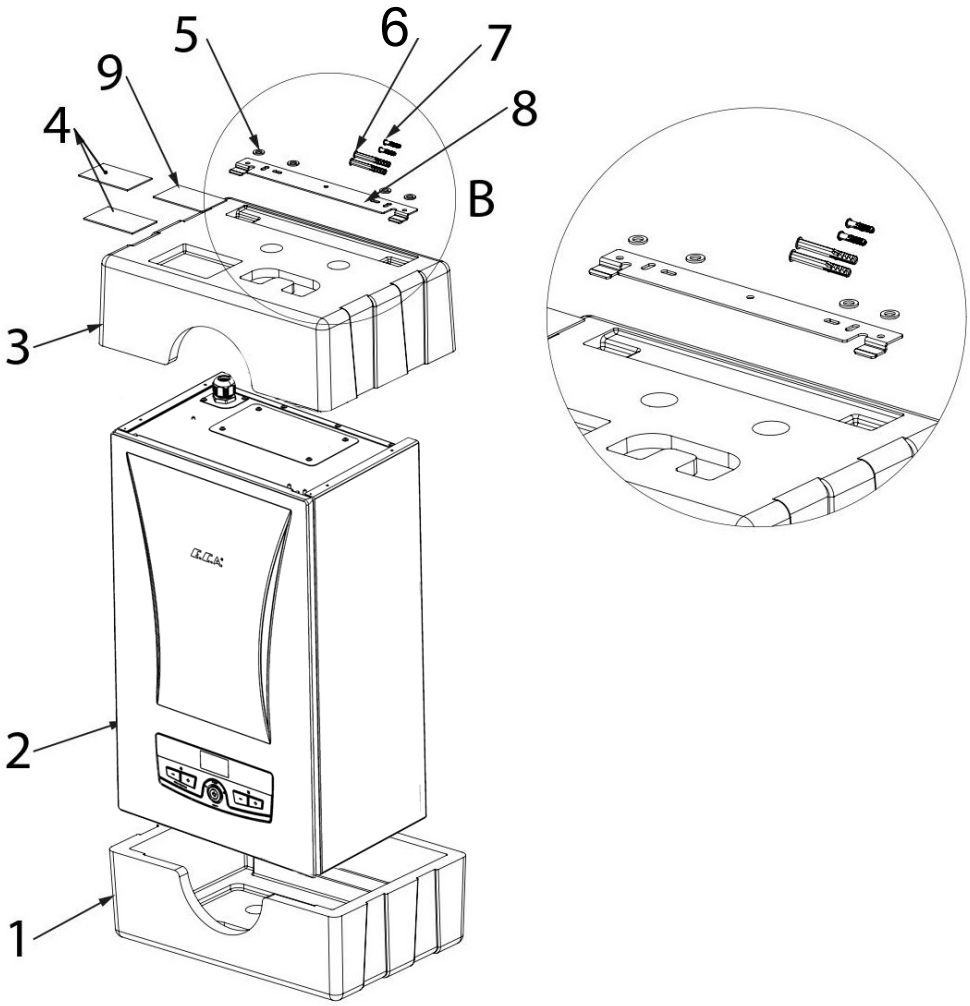

Figure 1. Package Exploded View

STANDARD PACKAGE LIST	
1-3. Bottom-Top Styrofoam	6. Anchors (2 pcs)
2. Boiler	7. Screws (2 pcs)
4. Operating and Service Manuals (2 pcs)	8. Wall Hanging Bracket
5. Gaskets (5 pcs)	9. Wall Mounting Template (1:1)

Table 4. Standard Package List

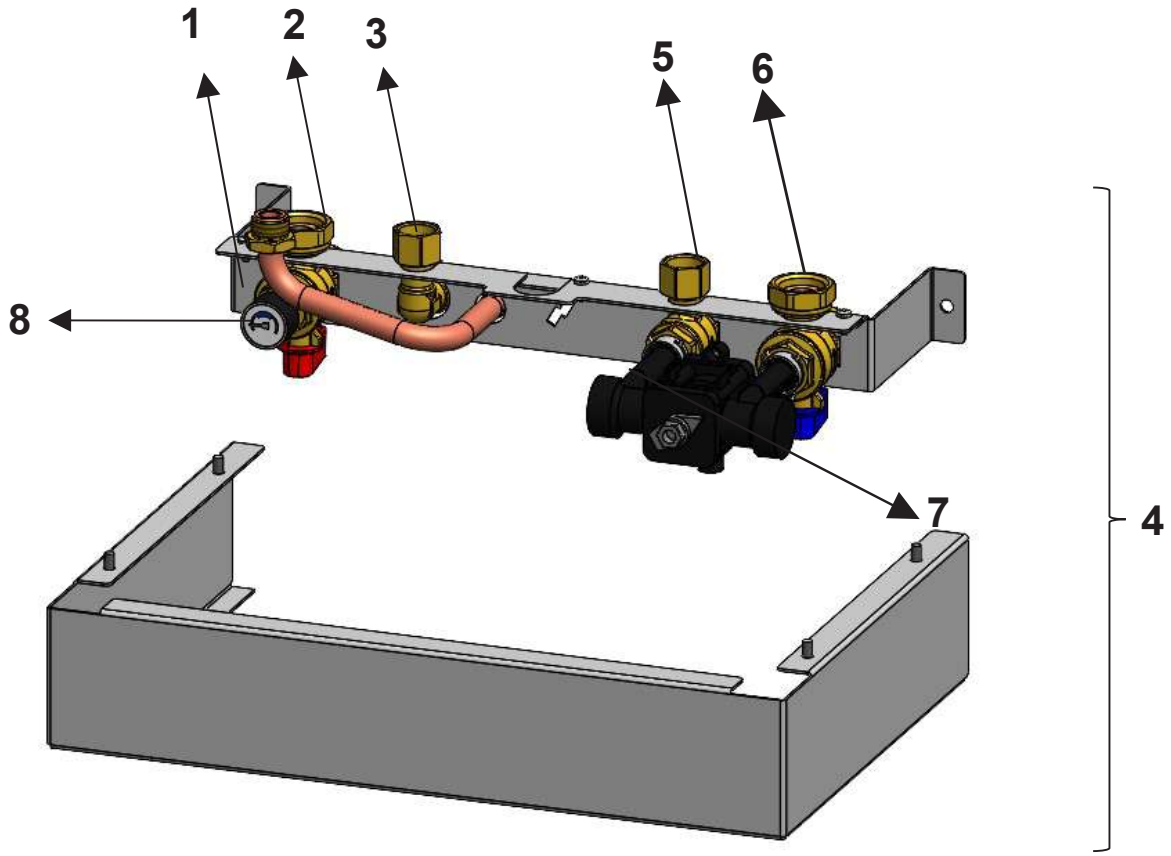

Figure 3. MT Isolating Valve Kit

VALVE KIT PACKAGE LIST	
1. Valve Fixing Bracket (1pc)	6. CH Return Manifold Valve (1pc)
2. CH Supply Manifold Valve (1pc)	7. Wras Approved Filling Loop (1 pc)
3. DHW Outlet Manifold Valve (Elbow) (1pc)	8. Manometer (1pc)
4. Isolating Valve Kit	
5. DHW inlet Valve (1pc)	

Table 5. MT Valve Kit Package List

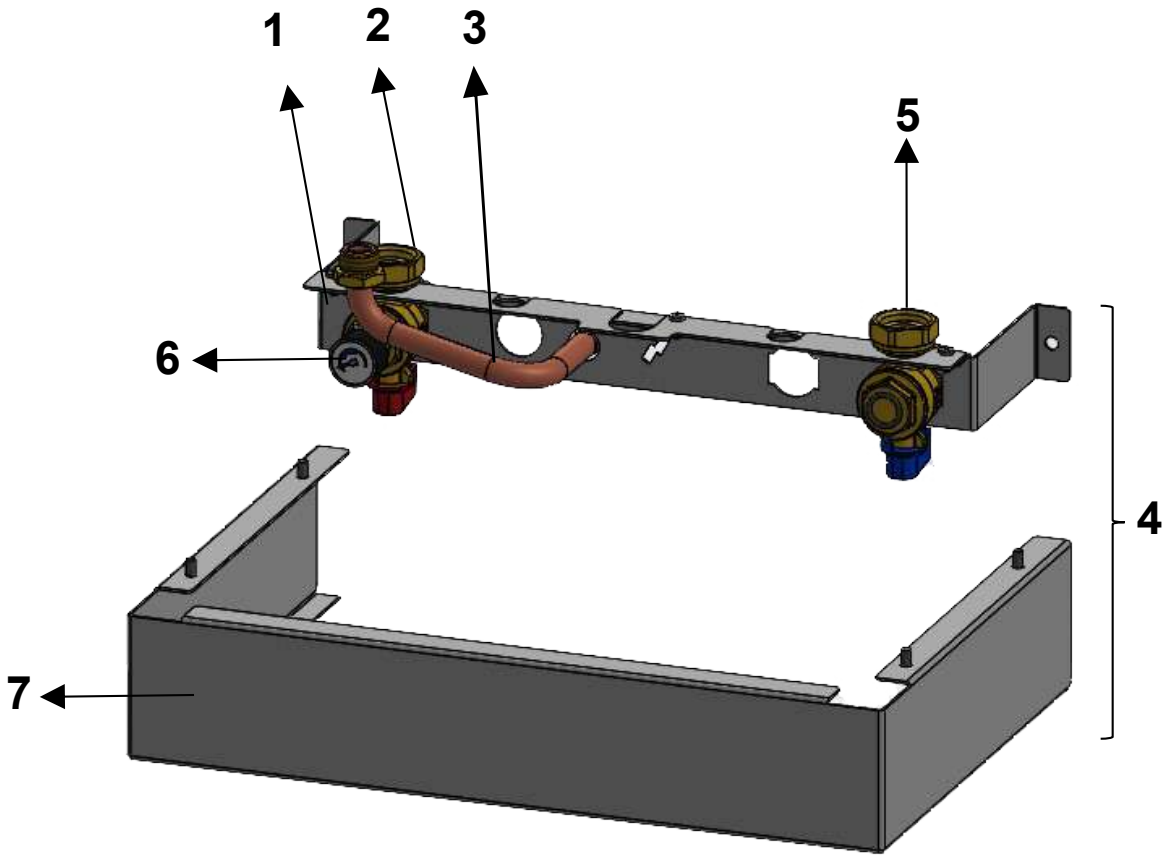

Figure 4. CH-ST Isolating Valve Kit

VALVE KIT PACKAGE LIST	
1. Valve Fixing Bracket (1pc)	5. CH Return Manifold Valve (1 pc)
2. CH Supply Manifold Valve (1pc)	6. Manometer (1pc)
3. 3 Bar Safety Valve Connection Pipe (1pc)	7. Cover Sheet (1 pc)
4. Isolating Valve Kit	

Table 6. CH-ST Valve Kit Package List

6.2 Main Components and Description

6.2.1 MT Model (Boiler)

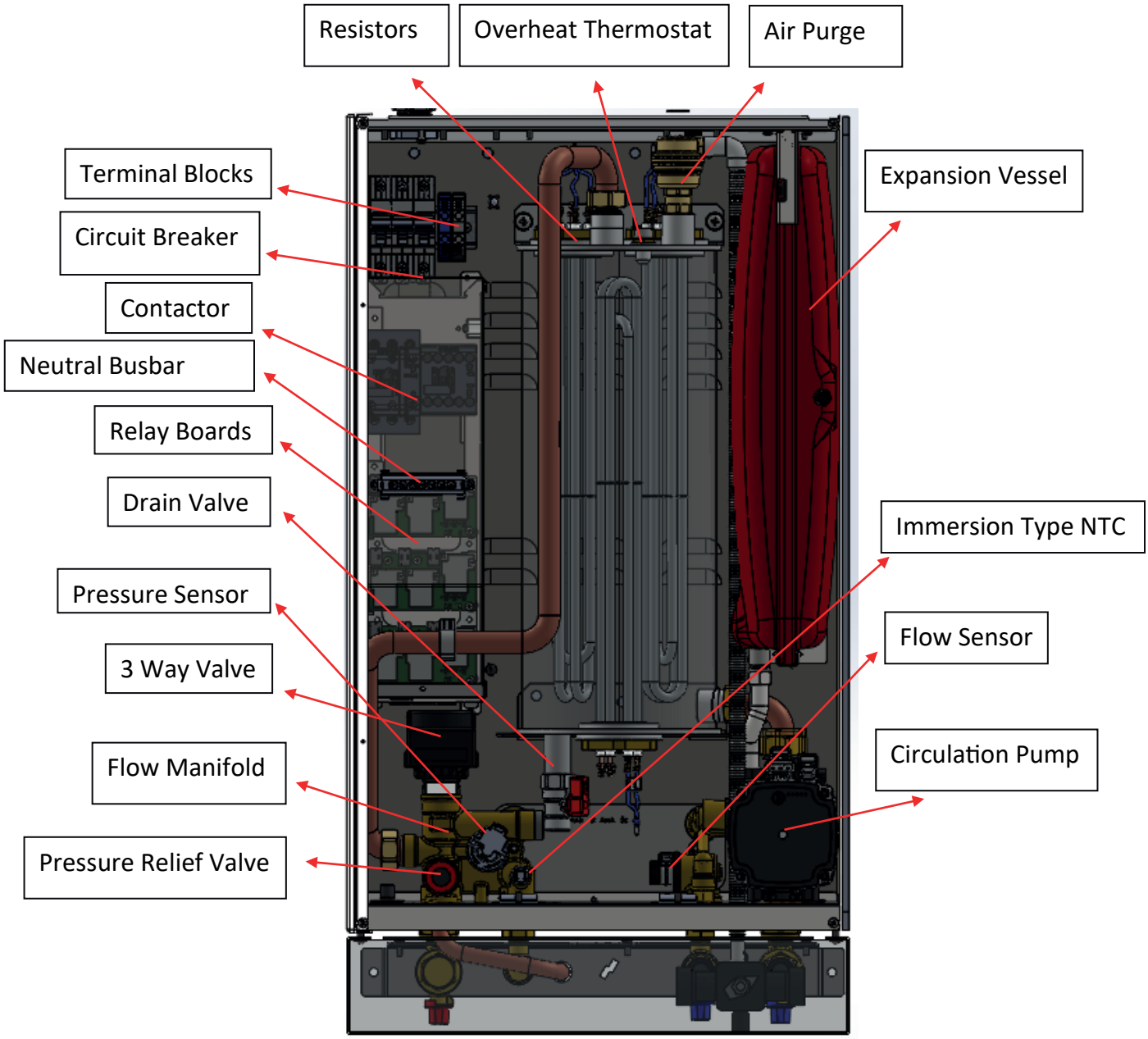

Figure 5. MT Boiler

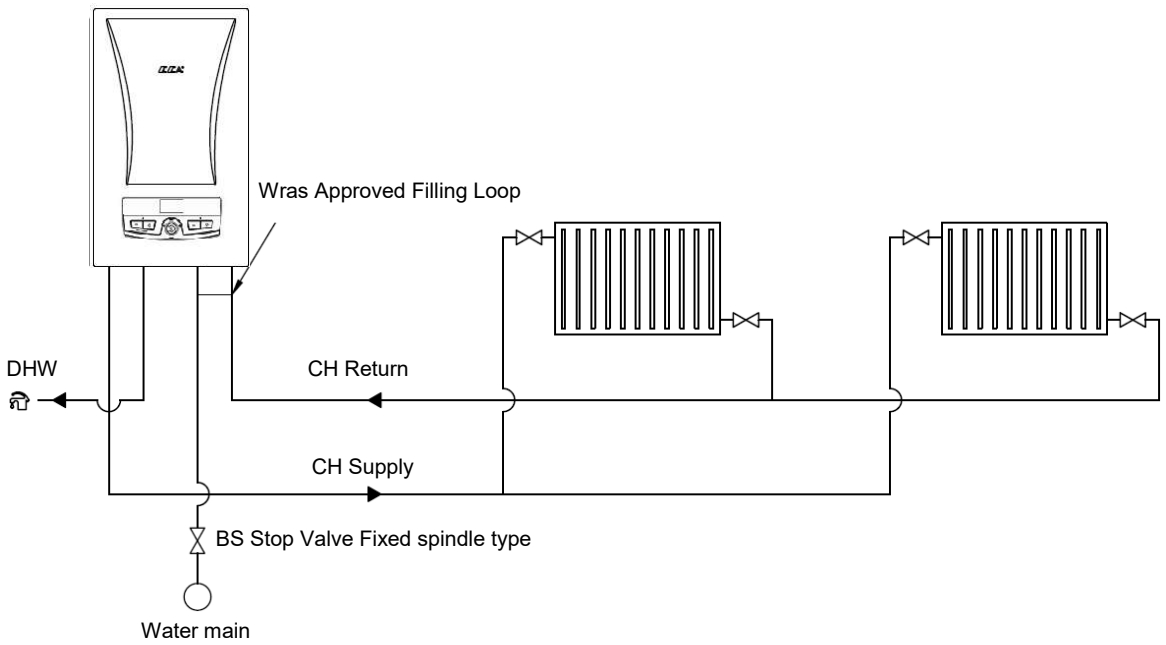

Figure 6. Installation for MT Boiler

6.2.2 ST Model (System Boiler)

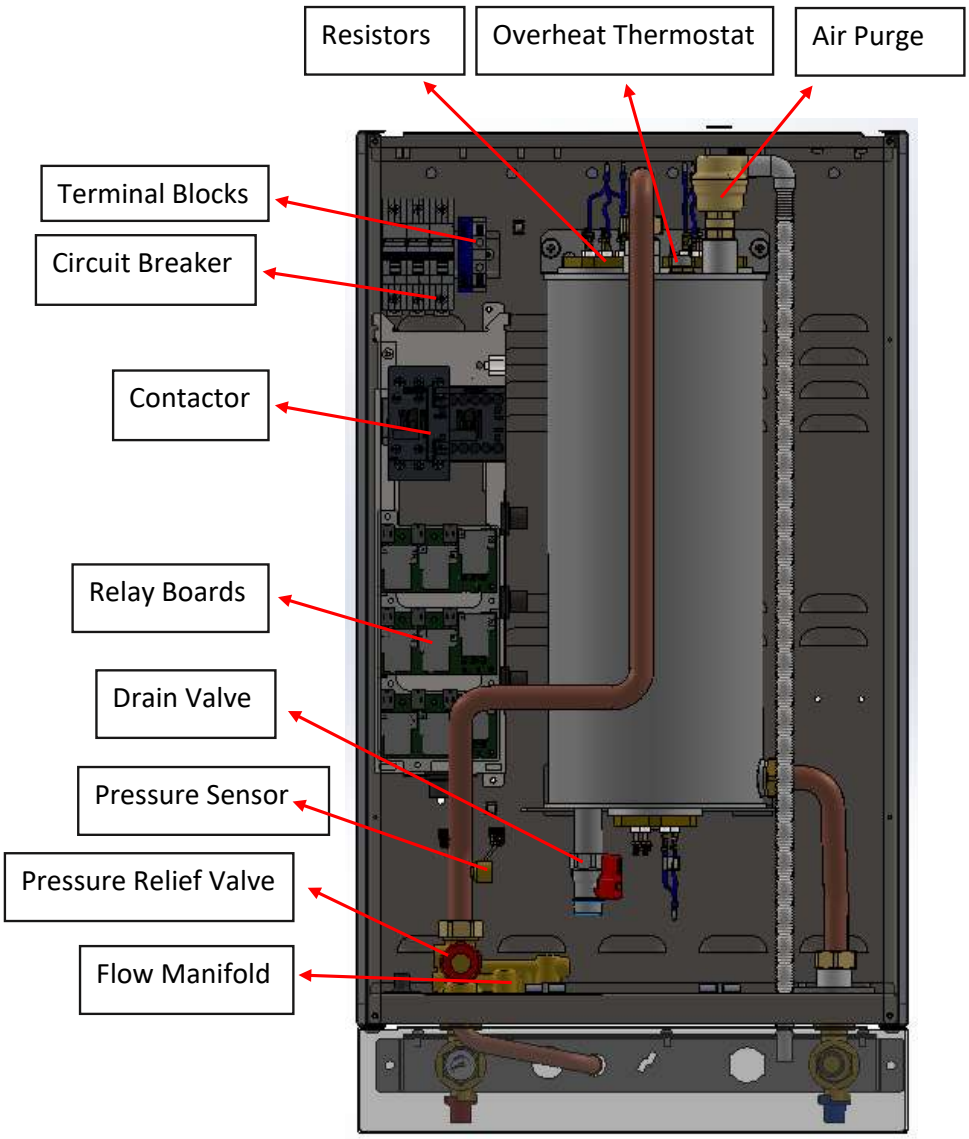

Figure 7. ST Boiler

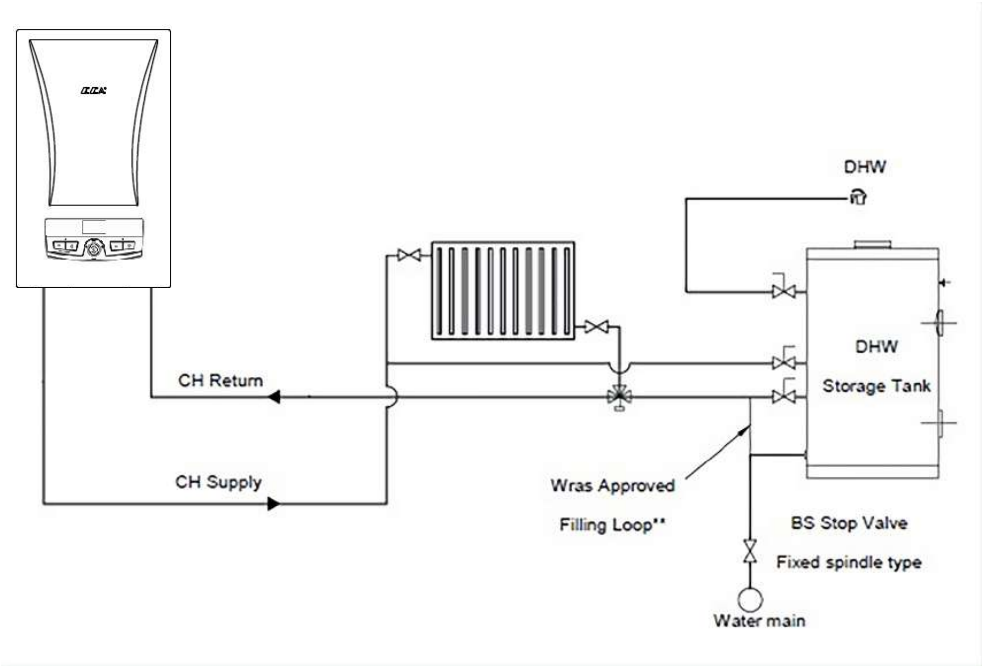

Figure 8. Installation for ST Boiler

*****External WRAS appoved filling loop must be added during installation.***

6.2.3 CH Model

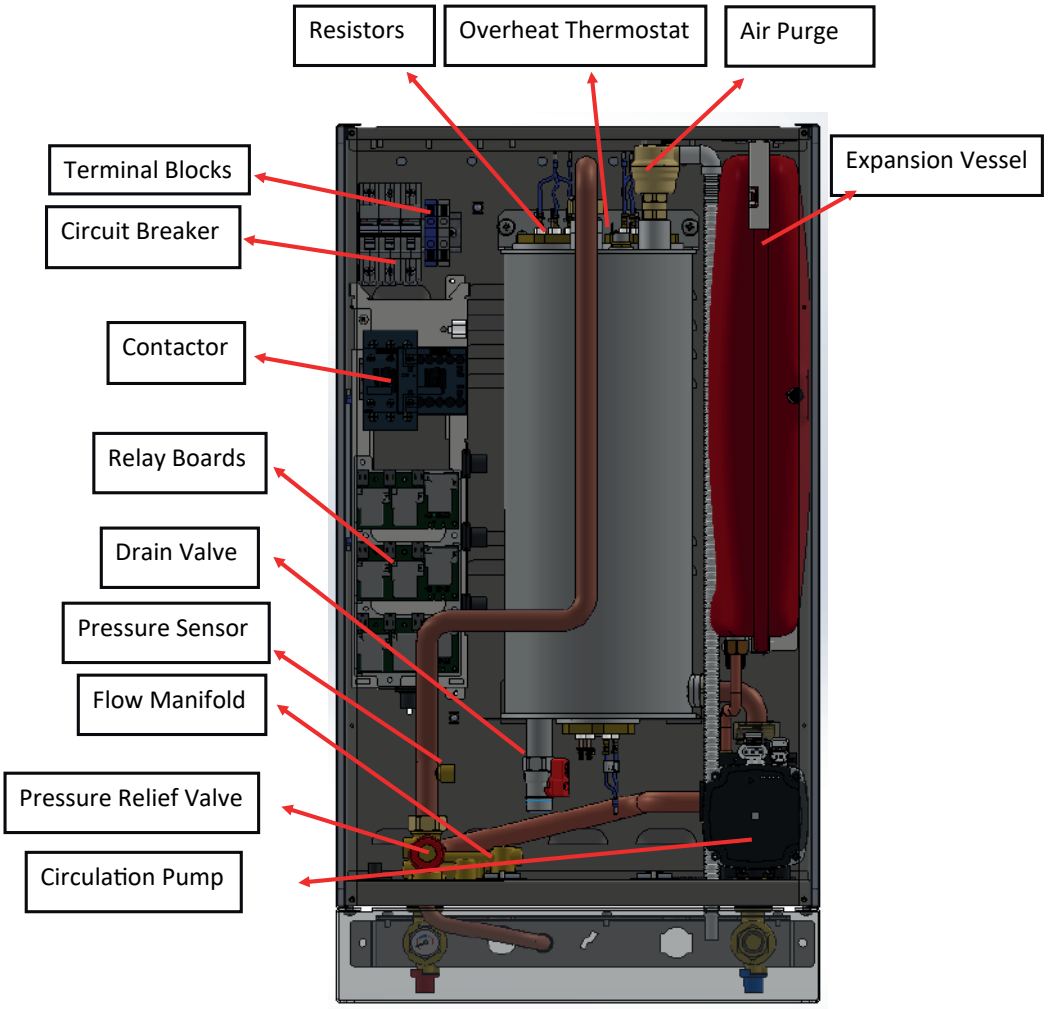

Figure 9. CH Boiler

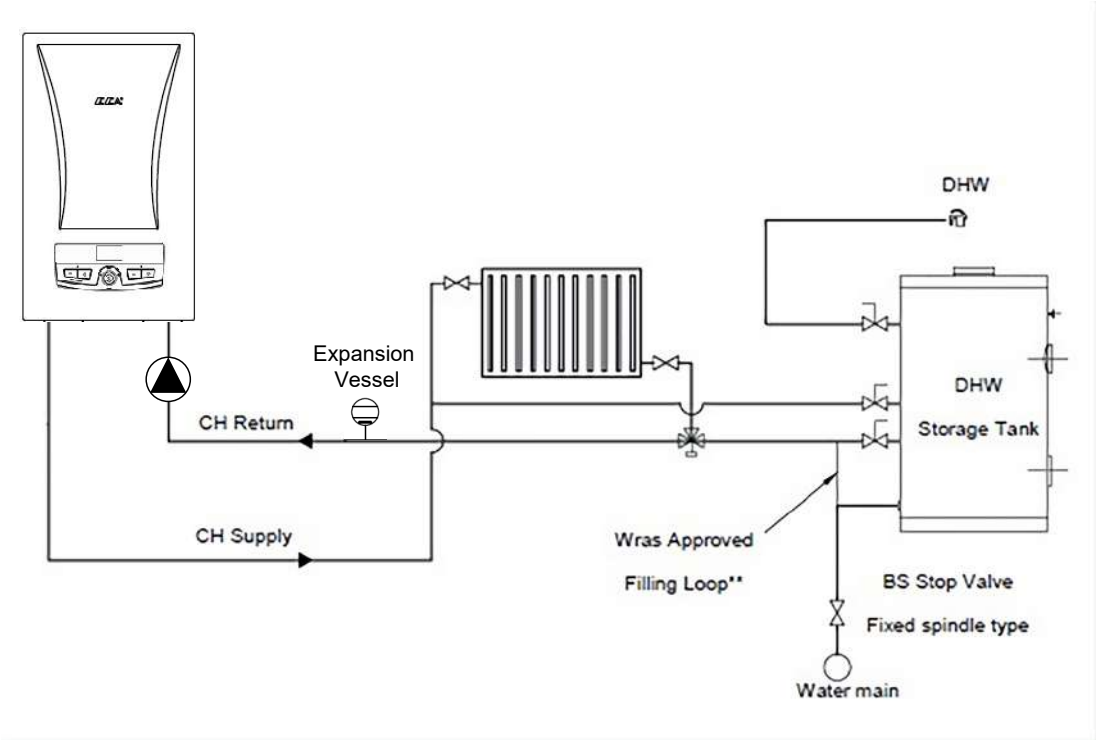

Figure 10. Installation for CH Boiler (Heat Only Type Installation)

*****External WRAS appoved filling loop must be added during installation.***

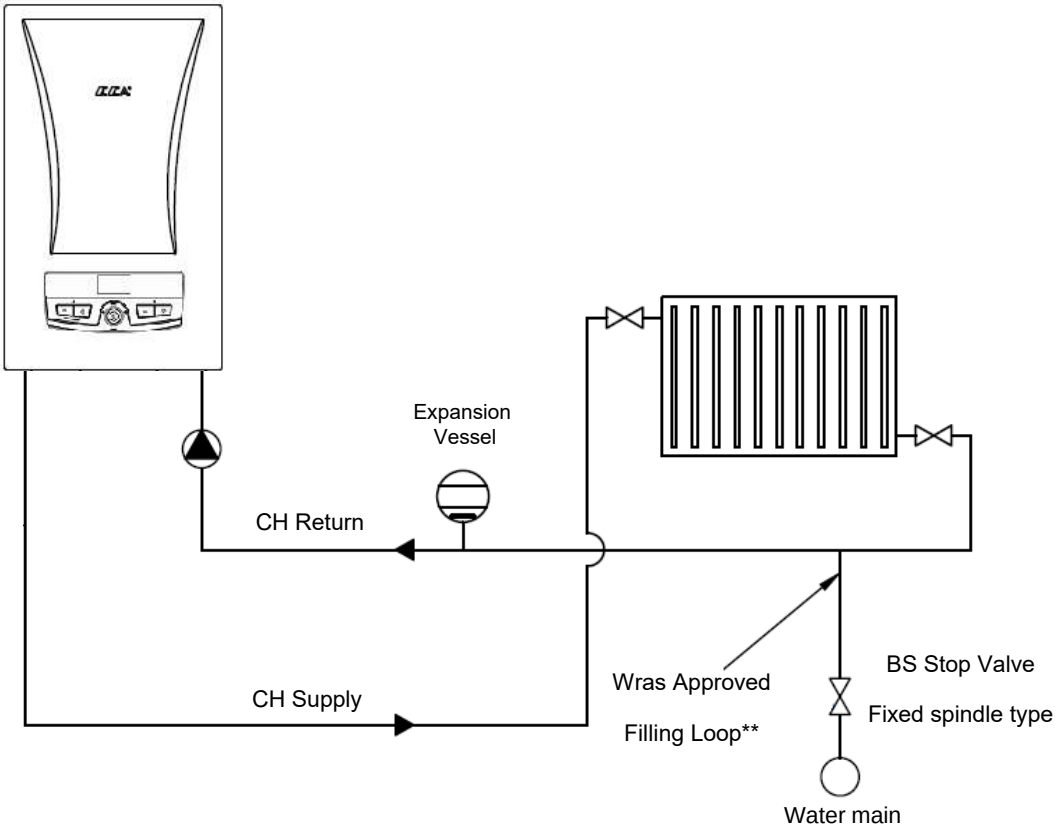

Figure 11. Installation for CH Boiler (Heat Only Type Installation)

****External WRAS appoved filling loop must be added during installation.**

6.3 Boiler Features

Control panel is ergonomic and easy to use. The Confeo Premix condensing boiler with elegant plastic control panel and advanced LCD screen provides ease of use and service. On a LCD display with black instrument panel; you can see the operating state icons, heating circuit and operating water adjustment values, the fault / failure codes and the heating water pressure. With the safety systems available in your boiler, safety of both you and your boiler are fully ensured.

These safety systems are;

- ✓ Boiler Over-Heat Safety System (95 °C)
- ✓ DHW (Domestic Hot Water) Over-Heat System (71°C)
- ✓ High Water Pressure Protection System (3 bar)
- ✓ Low Water Pressure Protection System (0.4 bar)
- ✓ Low Voltage Protection System (170 VAC)
- ✓ Thermal Accumulation Protection System (with by-pass circuit and ‘’pump over-run’’)
- ✓ Frost Protection System for both CH and DHW circuit
- ✓ Pump Anti-sticking Function
- ✓ 3 Way Valve Anti-sticking Function (except CH - ST Model)
- ✓ Automatic Air Vent
- ✓ Expansion Vessel (8 liters)
- ✓ Annual Maintanence Reminder
- ✓ Anti-legionella Protection (only for ST Model)
- ✓ Predictive Maintenance Features (In cases where there is a risk of error, giving warning before error occurs)

6.4 Technical Data

Product Type		Unit	ARCEUS EK 6 CH-ST	ARCEUS EK 9 CH-ST	ARCEUS EK 12 MT-CH-ST	ARCEUS EK 15 MT-CH-ST	ARCEUS EK 18 MT-CH-ST	ARCEUS EK 24 MT-CH-ST	ARCEUS EK 27 MT-CH-ST
Capacity									
Nominal Power		kW	6	9	12	15	18	24	27
Minimum Heang Power		kW	2	3	2	2	2	2	3
ERP Information									
Seasonal Space Heating Efficiency Class			D	D	D	D	D	D	D
Water Heating Energy Efficiency Class/Load			-	-	C-M	C-M	C-M	C-XL	C-XL
Rated Heat Output (Prated)		kW	5,9	8,9	11,9	14,9	17,9	23,9	26,9
Seasonal Space Heating Efficiency		%	39,4	39,5	39,6	39,8	39,8	39,9	39,9
Water Heating Energy Efficiency		%	-	-	36	37	37	38	38
Sound Power Level		dB(A)	42	42	38	38	38	38	38
Annual Energy Consumption	Space Heating	kWh	5133	7743	10353	12963	15573	20793	23403
	Water Heating	kWh	-	-	1348	2688	2688	4399	4399
Temperature Regime (η_4)		%	39,4	39,5	39,6	39,8	39,8	39,9	39,9
In Standby Mode		kW	0,003	0,003	0,004	0,004	0,004	0,004	0,005
Standby Heat Loss		kW	0,042	0,042	0,044	0,044	0,05	0,05	0,05
Central Heating									
Minimum Water Pressure		bar	0,4						
Maximum Water Pressure		bar	3						
Operation Range (@Radiator Heating)		°C	30-80						
Operation Range (@Underfloor Heating)		°C	30-45						
Maximum Limit Temperature		°C	>90						
Domestic Hot Water (Only Valid For HM)									
Minimum Domestic Flow for Operating		L/min	-	-	2,5±%10				
Minimum Domestic Flow for Closing		L/min	-	-	2,0±%10				
Maximum DHW Flow Rate		L/min	-	-	7±%15	8±%15	9±%15	10±%15	10±%15
ΔT for Maximum DHW Flow		°C	-	-	24,6	26,9	28,7	34,4	38,7
Minimum Water Pressure		bar	-	-	0,4				
Maximum Water Pressure		bar	-	-	10				
General									
Supply Power Voltage		VAC	1~ 230 VAC	1~ 230 VAC	1~ 230 VAC	1~ 230 VAC	3~ 400 VAC	3~ 400 VAC	3~ 400 VAC
			3~ 400 VAC	3~ 400 VAC	3~ 400 VAC	3~ 400 VAC			
Nominal Current		A	1~ 26,1	1~ 39,1	1~ 52,2	1~ 65,3	26,1	34,8	39,1
			3~ 8,7	3~ 13,1	3~ 17,4	3~21,7			
Power Cord Cross Section		mm²	1~ 3x6	1~ 3x10	1~ 3x10	3x16	5x6	5x6	5x10
			3~ 5x2,5	3~ 5x2,5	3~ 5x4	5x6			
Expansion Vessel		L	8						
Protection Class			IPX4D						
Net Weight		kg	26	26	27	27	29	29	29
Dimensions		HxWxD	678 x 410 x 288						

Table 7. Technical Table

*It's recommended to adjust CH temperature set value above 40°C if you don't use room thermostat.

**It's not recommended to use DHW flow rate below 2,5 l/min for stable DHW usage.

**** It depends on maximum inlet temperature value.

6.5 ERP Technical Data

ARCEUS Combi ERP		Units	MT Model				
Supplier's name or trademark			E.C.A.				
Supplier's model identifier			Arceus 12 kW	Arceus 15 kW	Arceus 18 kW	Arceus 24 kW	Arceus 27 kW
Space Heating-Temperature application			Medium				
Efficiency Class	Seasonal Space heating		D	D	D	D	D
	Domestic Hot Water Heating Efficiency*		C	C	C	C	C
Water Heating Load Profile*			M	L	L	XL	XL
Rated heat output (Prated)		kW	11,9	14,9	17,9	23,9	26,9
Annual energy consumption	Space heating	kWh	10353	12963	15573	20793	23403
		GJ	37	46	56	75	84
Annual electric consumption	Water heating	kWh	1348	2688	2688	4399	4399
Annual fuel consumption*		GJ	-	-	-	-	-
Energy efficiency	Seasonal space heating	%	36	37	37	37	38
	Water heating*	%	36	37	37	38	38
Sound Power Level Lwa indoors		dB	38				
Specific precautions for assembly, installation and maintanence			All specific precautions for installation, assembly and maintanence are described in the installation and service manual.				

ARCEUS Combi ERP		Units	CH / ST Model						
Supplier's name or trademark			E.C.A.						
Supplier's model identifier			Arceus 6 kW	Arceus 9 kW	Arceus 12 kW	Arceus 15 kW	Arceus 18 kW	Arceus 24 kW	Arceus 27 kW
Space Heating-Temperature application					Medium				
Efficiency Class	Seasonal Space heating		D	D	D	D	D	D	D
Rated heat output (Prated)		kW	5,9	8,9	11,9	14,9	17,9	23,9	26,9
Annual energy consumption	Space heating	kWh	5133	7743	10353	12963	15573	20793	23403
		GJ	18	27	37	46	56	75	84
Energy efficiency	Seasonal space heating	%	36	36	36	37	37	37	38
Sound Power Level Lwa indoors		dB	42	42	38				
Specific precautions for assembly, installation and maintanence		All specific precautions for installation, assembly and maintanence are described in the installation and service manual.							

Table 8. ERP Technical Table

6.6 PACKAGE LABEL CALCULATIONS

Package fiche for boilers indicating the space heating energy efficiency of the package 6.6.1

Package Fiche-Boilers

Seasonal space heating energy efficiency of boiler

"T": The value of the seasonal space heating energy efficiency of the preferential space heater, expressed in %.

(1) T [ ] %

Temperature Control

from fiche of temperature control

Class I = 1%, Class II = 2%, Class III = 1.5%, Class IV = 2%, Class V = 3%, Class VI = 4%, Class VII = 3.5%, Class VIII = 5%

+ (2) [ ] %

Supplementary Boiler

Seasonal space heating energy efficiency (in %)

([ ] - T) x 0.1 = ± (3) [ ] %

Solar Contribution from fiche of solar device

Collector size (in m²) | Tank Volume (im m²) | Collector efficiency (in %) | Tank rating A*=0,95, A=0,91, B=0,86, C=0,83, D - G =0,81

('III' x [ ] + 'IV' x [ ]) x 0.9 x ([ ] / 100) x [ ] = + (4) [ ] %

"III' : The value of the mathematical expression : 294/(11.Prated), whereby 'Prated' is related to the preferential space heater.

'IV' : The value of the mathematical expression : 115/(11.Prated), whereby 'Prated' is related to the preferential space heater.

(1) If tank rating is above A, use 0.95

Supplementary Heat Pump

from fiche of heat pump

"II' : The factor for weighting the heat output of preferential and supplementary heaters of a package as set out in the following table.

Seasonal space heating energy efficiency (in %)

5

(☐ - 'T ') x 'II' = ☐ %

Solar Contribution and Supplementary Heat

Pump select smaller value

4 5 6

0,5 x ☐ **or 0,5 x** ☐ **= -** ☐ **%**

Seasonal Space Heating Energy Efficiency Class of Package

7

☐ %

Seasonal Space Heating Energy Efficiency Class of Package

☐	☐	☐	☐	☐	☐	☐	☐	☐	☐
G	F	E	D	C	B	A	A+	A++	A+++
<30%	≥30%	≥34%	≥36%	≥75%	≥82%	≥90%	≥98%	≥125%	≥150%

The energy efficiency of the package of products provided for in this fiche may not correspond to its actual energy efficiency once installed in a building, as this efficiency is influenced by further factors such as heat loss in the distribution system and the dimensioning of the products in relation to building size and characteristics.

Package Fiche-Combination Heaters (Boilers or Heat Pumps)

Water heating energy efficiency of combination heater

1

Declared load profile :

T ☐ %

Solar Contribution

from fiche of solar device

Auxillary electricity

(1.1 x 'I' - 10 %) x 'II' - [ ] 'III' - 'I' = + [ ] % (2)

Water Heating Energy Efficiency of Package under Average Climate

[ ] % (3)

Water Heating Energy Efficiency Class of Package under Average Climate

	G	F	E	D	C	B	A	A+	A++	A+++
M	<27%	≥27%	≥30%	≥33%	≥36%	≥39%	≥65%	≥100%	≥130%	≥163%
L	<27%	≥27%	≥30%	≥34%	≥37%	≥50%	≥75%	≥115%	≥150%	≥188%
XL	<27%	≥27%	≥30%	≥35%	≥38%	≥55%	≥80%	≥123%	≥160%	≥200%
XXL	<28%	≥28%	≥32%	≥36%	≥40%	≥60%	≥85%	≥131%	≥170%	≥213%

Water Heating Energy Efficiency under Colder and Warmer Climate Conditions

Colder:

(3) [ ] - 0.2 x (2) [ ] = [ ] %

Warmer:

(3) [ ] + 0,4 x (2) [ ] = [ ] %

The energy efficiency of the package of products provided for in this fiche may not correspond to its actual energy efficiency once installed in a building, as this efficiency is influenced by further factors such as heat loss in the distribution system and the dimensioning of the products in relation to building size and characteristics.

"I' The value of the water heating energy efficiency of the combination heater, expressed in %.

'II' The value of the mathematical expression (220 . Qref)/Qnonsol, where Qref is taken from Regulation EU 811/2013, Annex VII Table15 and Qnonsol from the product fiche of the solar device for the declared load profile M, L, XL or XXL of the combination heater.

'III' The value of the mathematical expression (Qaux . 2,5)/(220 . Qref), expressed in %, where Qaux is taken from the product fiche of the solar device and Qref from Regulation EU 811/2013, Annex VII Table 15 for the declared load profile M, L, XL or XXL.

7- INSTALLATION

7.1 Selection of Location of Boiler

The boiler must be installed in accordance with relevant standards.
Additionally, the clearance around the boiler should be as shown in fig 12. In order to make service, maintenance and usage easier.

Figure 12: It shows the minimum distances required from the top and sides of the boiler (Dimensions given in mm).

The installation must comply with the following minimum distances so that servicing and maintenance of the boiler can be performed correctly. The position of the boiler must be checked against technical requirements.

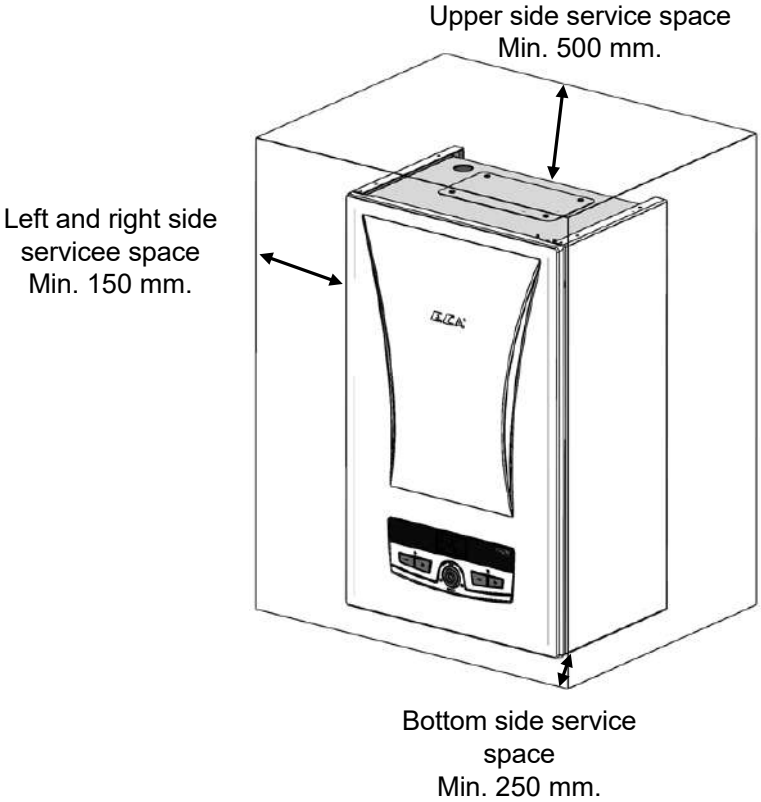

Figure 12.Combi Mounting Clearances

CAUTIONS :

✓ Do not install your boilers in locations that will be exposed to direct sunlight. Sunlight can cause color change on the exterior of your boiler over time.
✓ Ambient temperature of boiler's installation location should be between 5 -35^{0}C.
✓ The boiler can be used at altitudes up to 2000 m above sea level.

Information

✓ It is not recommended to install “Isolating Valve Cover” (figure 13-No 1) to the boiler if kitchen cupboard is used for installation place. It can be used at open space areas to hide valve set and filling loop.

7.2 Mounting The Boiler

Having determined the boiler location,

✓ The points of lock screws of wall bracket and assembly bracket are marked by using the wall-mounting template provided with the boiler.
✓ After drilling the marked points, wall assembly bracket and assembly bracket are fixed on the wall by the dowel and lock screws, which are inside the packaging of the boiler.
✓ Finally, the boiler is hanged on the wall by placing the assembly bracket on the back side of the boiler on the mounting bracket assembled on the wall.

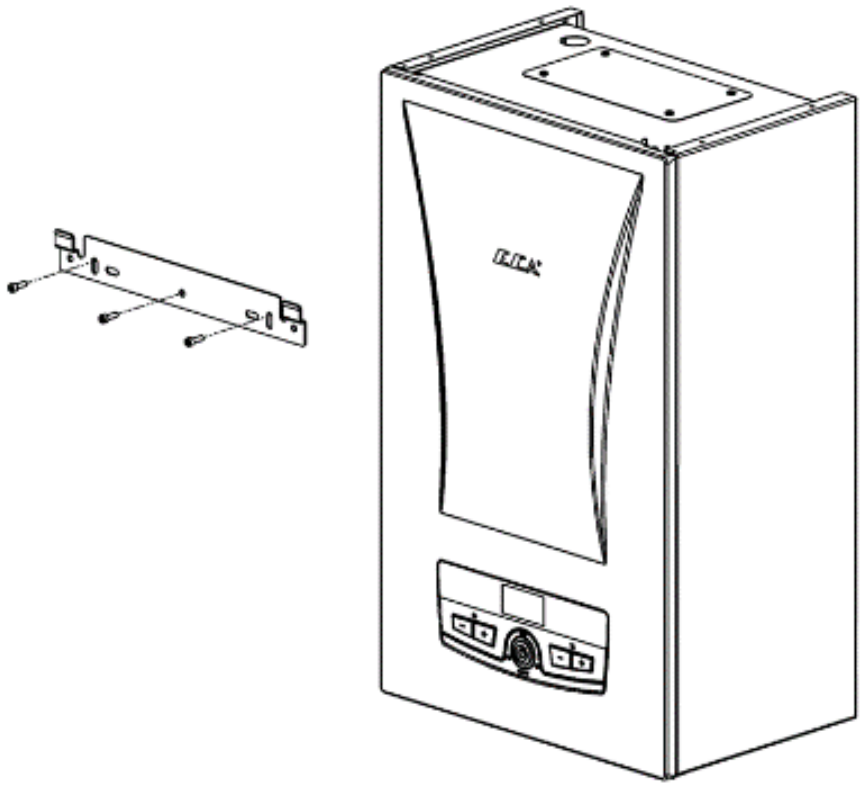

Figure 13. Boiler & Wall Hanging Bracket

8-CONNECTIONS

8.1- Electrical Connection

Your combi boiler must be connected to a grounded power line that can supply 230 VAC 50 Hz voltage for single-phase devices and 400 VAC 50 Hz voltage for 3-phase devices. Malfunctions caused by voltage fluctuations are not covered by the warranty.

DANGER: When making the electrical connection of the device, be sure that there is no voltage in the power line.

DANGER: If the supply cable is damaged, it must be replaced by the manufacturer, or an authorized service or an equivalent qualified person.

CAUTION: Power supply line of the device must be protected by a residual current device with 30 mA tripping sensitivity.

CAUTION: The electrical connection of your device must be made according to the cable sections in the table.

CAUTION: There is a circuit breaker placed in the device for overcurrent protection. In case the circuit breaker trips, call an authorized service

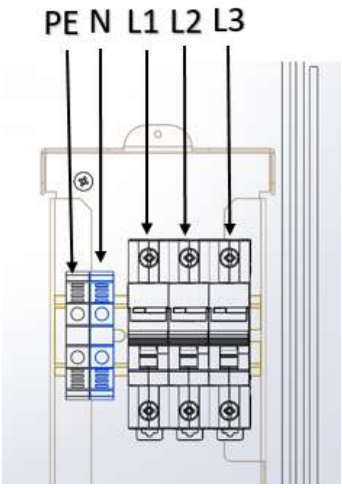

CAUTION: Only 6, 9 ,12 and 15 kW models are suitable for single phase operation.

CAUTION: For single-phase operation of the device, you can connect the live wire of the supply cord to the middle pole of the circuit breaker and bridge to the other poles of the circuit breaker by the bridging bar supplied with the product.

Device	Power Supply	Supply Cord (mm²)	Nominal Current (A)	Supply Line Minimum Circuit Breaker Capacity
ARCEUS 6 CH-ST	Single-phase	3x6	26	B32-1P
	Three-phase	5x2.5	9	B10-3P
ARCEUS 9 CH-ST	Single-phase	3x10	39	B40-1P
	Three-phase	5x2.5	13	B16-3P
ARCEUS 12 MT-CH-ST	Single-phase	3x10	52	B63-1P
	Three-phase	5x4	17	B20-3P
ARCEUS 15 MT-CH-ST	Single-phase	3x16	65	B80-1P
	Three-phase	5x6	21	B25-3P
ARCEUS 18 MT-CH-ST	Three-phase	5x6	26	B32-3P
ARCEUS 24 MT-CH-ST	Three-phase	5x6	35	B40-3P
ARCEUS 27 MT-CH-ST	Three-phase	5x10	39	B40-3P

Table 9. Power Supply Connection Requirements

8.2 Water Connections

8.2.1 MT Model

a) Central heating pipe 3/4" outlet line (hot)
b) Domestic water pipe 1/2" outlet line (hot)
c) Domestic water pipe 1/2" inlet line (cold)
d) Central heating pipe 3/4" return line (cold)

e) A suitable sized valve should be installed in the water pipelines. In addition, a strainer must be placed in the domestic water (1/2") pipe inlet line and central heating (3/4") pipe return line.
f) The hose from the 3-bar safety valve must be connected to the sewage drain line.

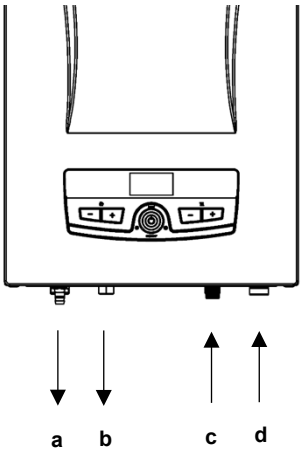

8.2.2 CH-ST Model

a)Central heating pipe 3/4" outlet line (hot)
b)Central heating pipe 3/4" return line (cold)

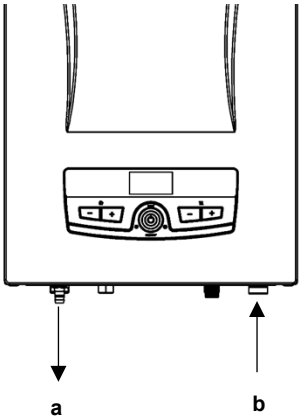

Figure 19. Connections of Boiler

✓ Isolating Valve set provided with boiler must be used for water connections.
✓ 3 bar safety valve connection must be installed with copper pipe.
✓ National and local requirements and legislations must be taken into consideration.

8.3 Wiring Diagram

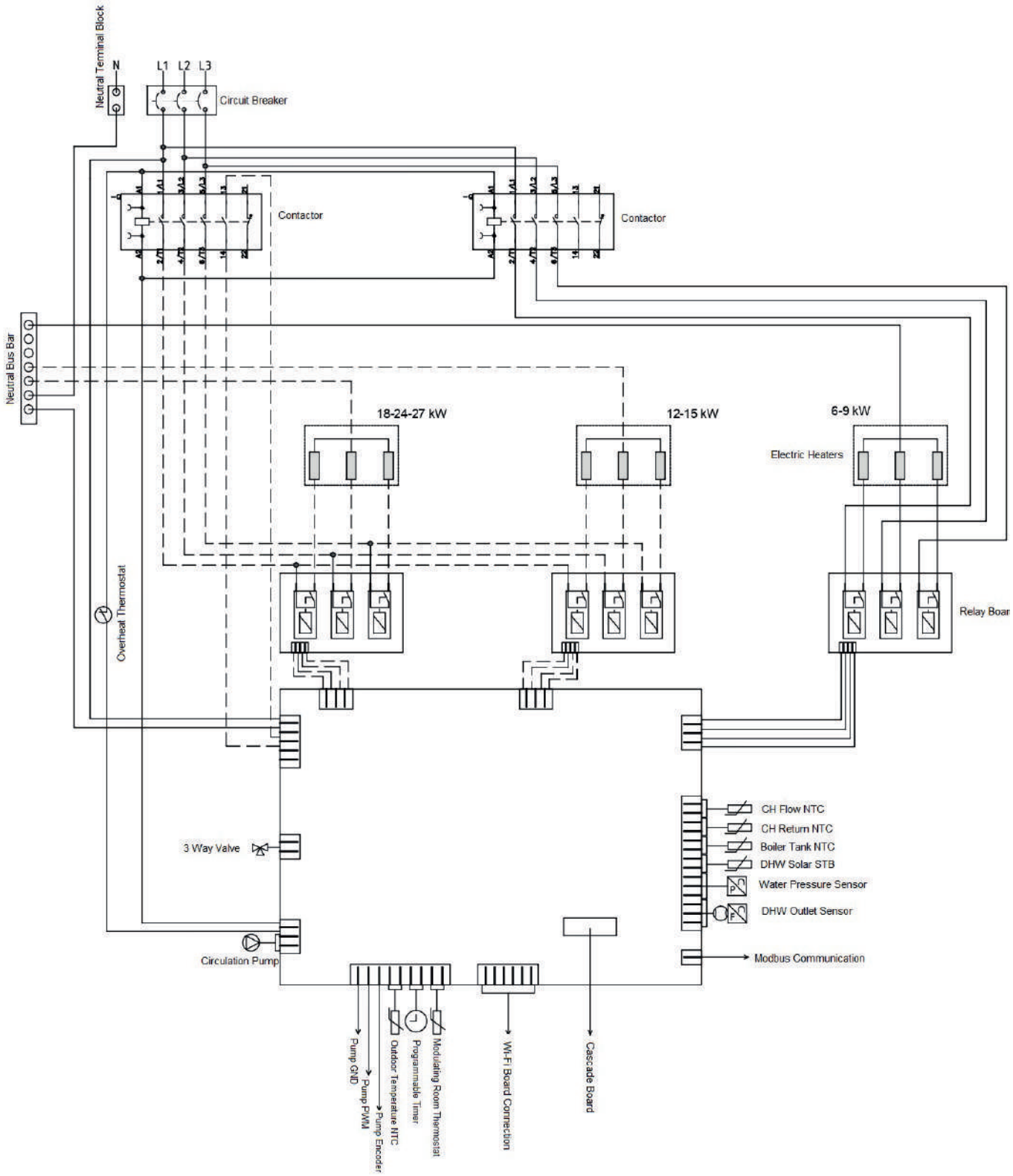

8.4 Room Thermostat

Optional room thermostats compatible with your boiler can be used to control heating system and must be installed by a authorized engineer.

E.C.A. On/Off Room Thermostat T6360

7006901312

E.C.A. On/Off Room Thermostat T6360

7006907804

E.C.A. Smart Combi Boiler Kit

7006907531

E.C.A. Digital Room Thermostat Cordless Programmable CM727

7006902046

Poly 100 W Room Thermostat

7006903001

E.C.A. Digital Room Thermostat

7006902502

E.C.A. On/Off Cordless Room Thermostat T6360

7006907522

E.C.A. On/Off Cable Room Thermostat

7006907519

E.C.A. Programmable Digital Room Thermostat

CM707

7006901313

Wireless

7006901501

Figure 14. Room Thermostat

8.5 Outdoor Sensor

To connect the room thermostat or outdoor sensor to the boiler, the connections behind the control panel are used. For the room thermostat, the bridged cable connection on the back of the control panel is removed and the outer air sensor is connected to free sockets on the terminal.

- ✓ It can be provided as an option according to boiler models.
- ✓ It allows operation of combi boiler adjusted to outside temperature.

Figure 15. Outdoor Sensor

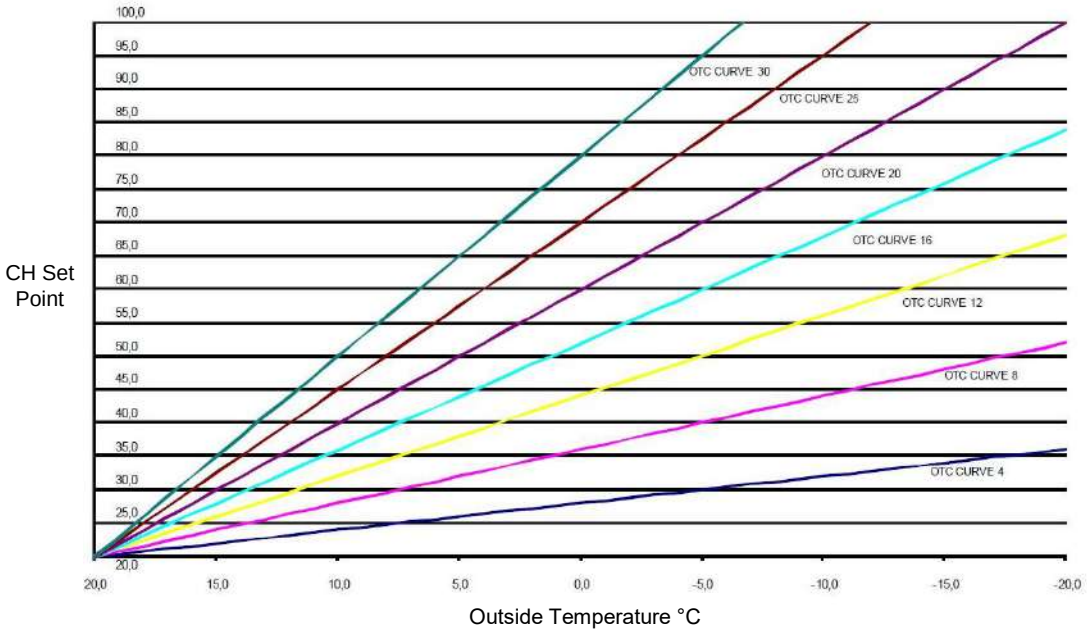

Graph 1. OTC Curve

8.6 Controller Connections

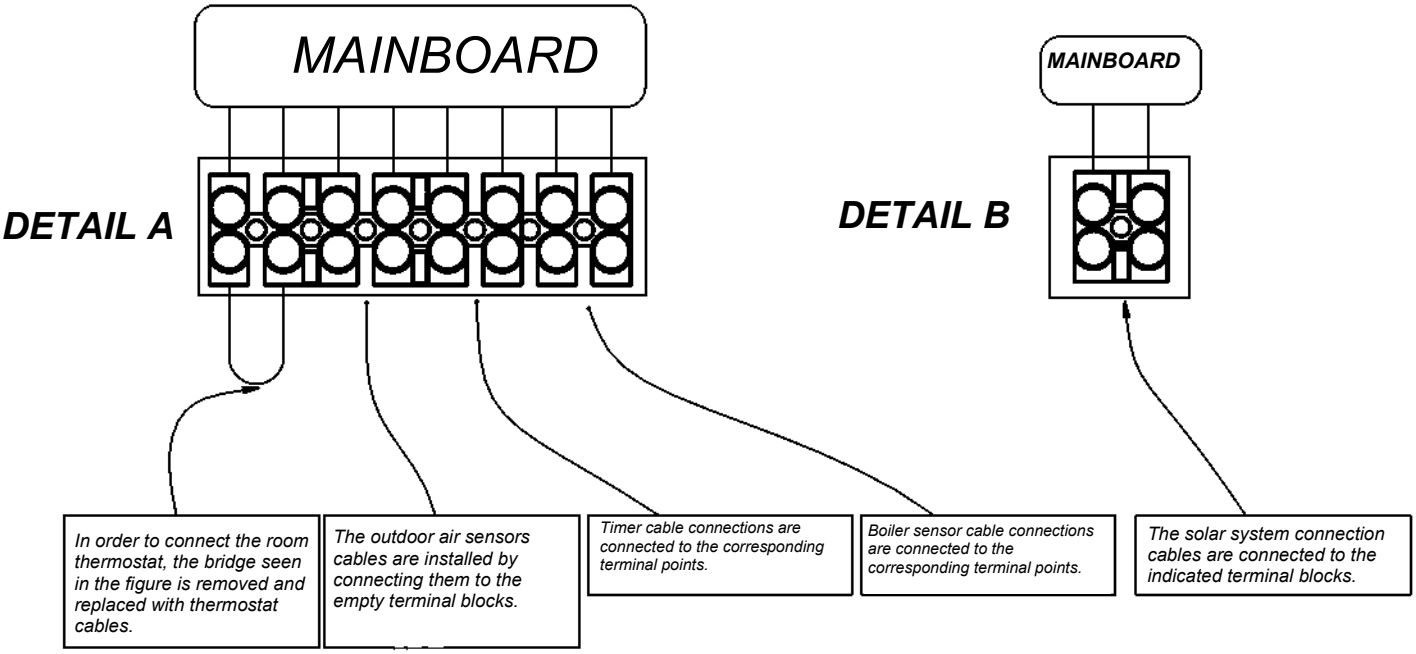

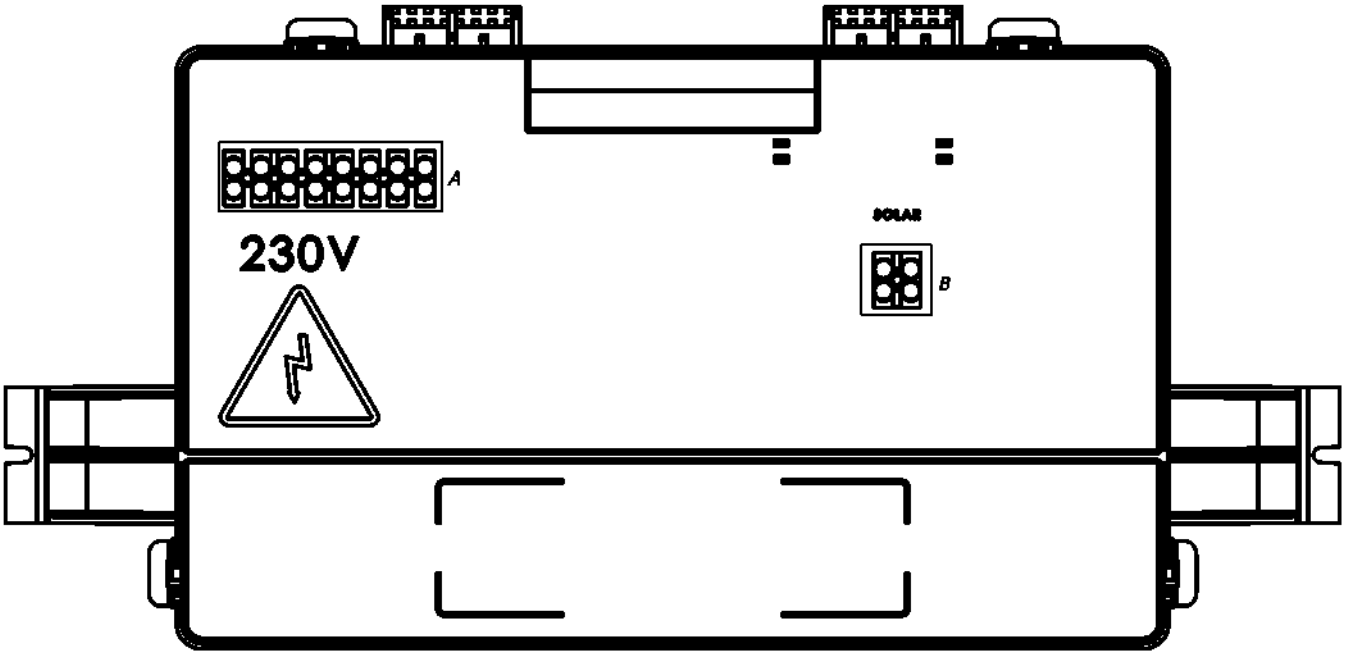

Remove the bridge on the other side on room thermostat connection.
Authorized engineer must install the room controller device to boiler.

The connections of room thermostat, outdoor sensor and timer must be performed certainly by authorized engineer.

8.7 Electrical Connections with Zone Valves

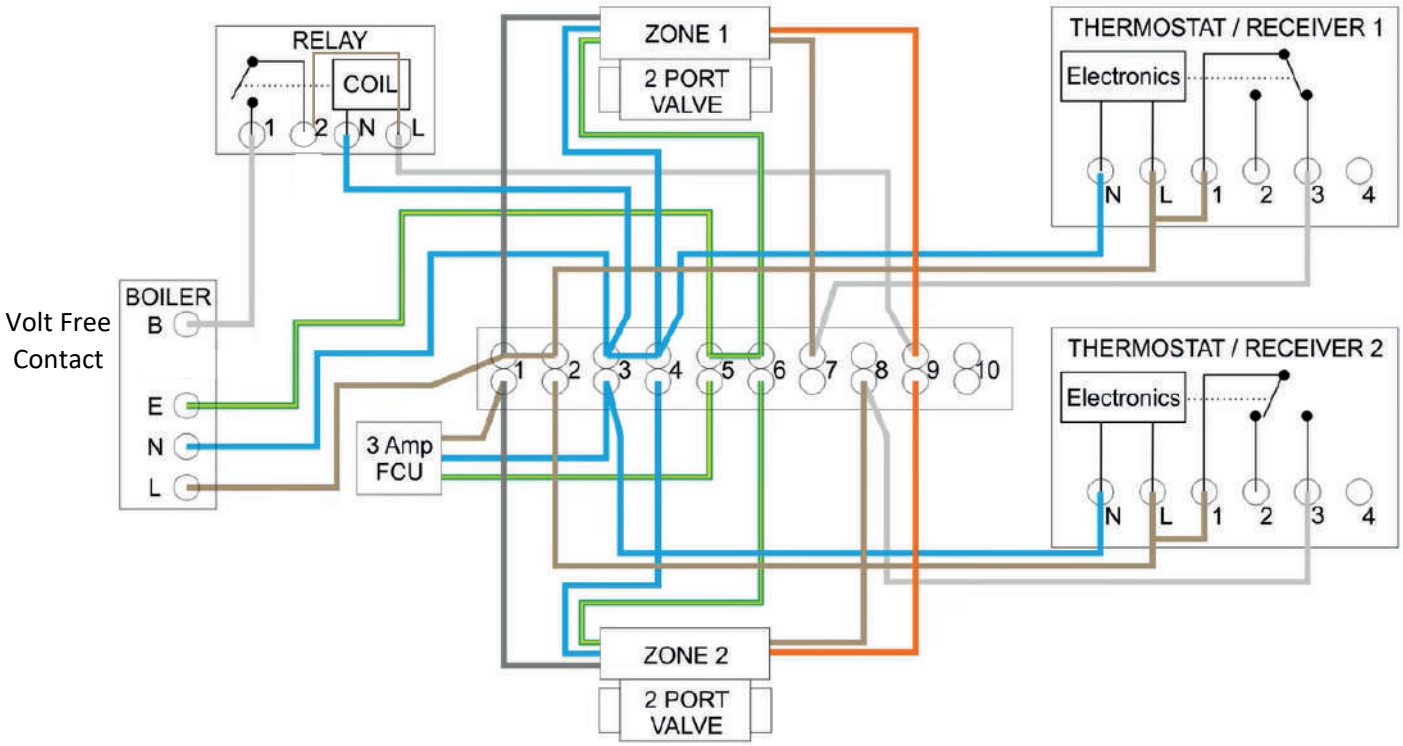

Figure 16. 2 Port Zone Valve

1- Remove the front panel.

2- Hinge down the control box.

3- Remove the link between terminals 1 and 2.

4- Use volt free contacts (Room Thermostat contacts) to install a system with zone valves.

CAUTION : Boiler has only volt free contact for switcing. Contactor relay switch must be installed according to these indications. There is no 230 V AC input on board.

9- COMISSIONING

9.1 Comissioning, Filling Water into Boiler and Heater Installation

✓ First of all, the electrical connection of the boiler is done. The electrical connection of the boiler must be Connected to a grounded power supply line that can supply enough voltage (230 VAC, 50 Hz) for the boiler.
✓ All radiator valves should be opened.
✓ CH flow and CH return of boiler should be opened. Check them.

ATTENTION: WRAS approved fiilling loop must be used while filling system.

Figure 17. Filling Loop

✓ After all these processes, approved filling valve is slowly opened and filling procedure is initiated.
The filling process continues until the water pressure of 1.5-2 bar is seen on the LCD display and then the filling valve is closed.
✓ When the water pressure increases to 0.8 bar, the LCD will show "AP" and the boiler will switch to automatic air vent mode. In this case you should definitely wait for 160 seconds without pressing "RESET".
✓ Check water pressure on pressure indicator frequently and ensure that the pressure is between 1.5 and 2 bar when system is cold. If the pressure drops frequently, it means that there is a water leak in the system. In such case, it is necessary to call a plumber.

ATTENTION : Always close the water filling valve, the installation water may leak and damage the environment**.**

✓ To discharge air out of CH installation, purgers of the radiator is loosened and air is discharged until water comes out of radiators. This procedure is done for all radiators.
✓ Pressure is checked again on LCD screen. The filling valve is opened and again pressure is raised to 1.5 - 2 bar level.
✓ Radiator purgers are checked again to see if there is any air left inside of heating installation. For full efficient heating, all air must be discharged.

✓ Finally, check for any leaks in the radiator and piping.

ATTENTION: In order to prevent calcification of the heat exchanger, you are advised not to use well water, natural spring water instead of mains water.
Check the domestic water installation by opening the hot water tap. Check for any leaks in the piping.

Call authorized engineer to start up the boiler after all these processes are completed. Commissioning must be strictly performed by authorized service.

✓At the end of the commissioning of the boiler after installation, please ask for information of authorized engineer on operating the boiler and relevant safety devices on boiler.

10-USING THE BOILER

10.1 Switching Off the Boiler

You can switch off the boiler by holding down the ON/ OFF button for 3 seconds.

LCD light will be OFF after 1 minute.

Anti-freeze function remains active.

11-CONTROL PANEL

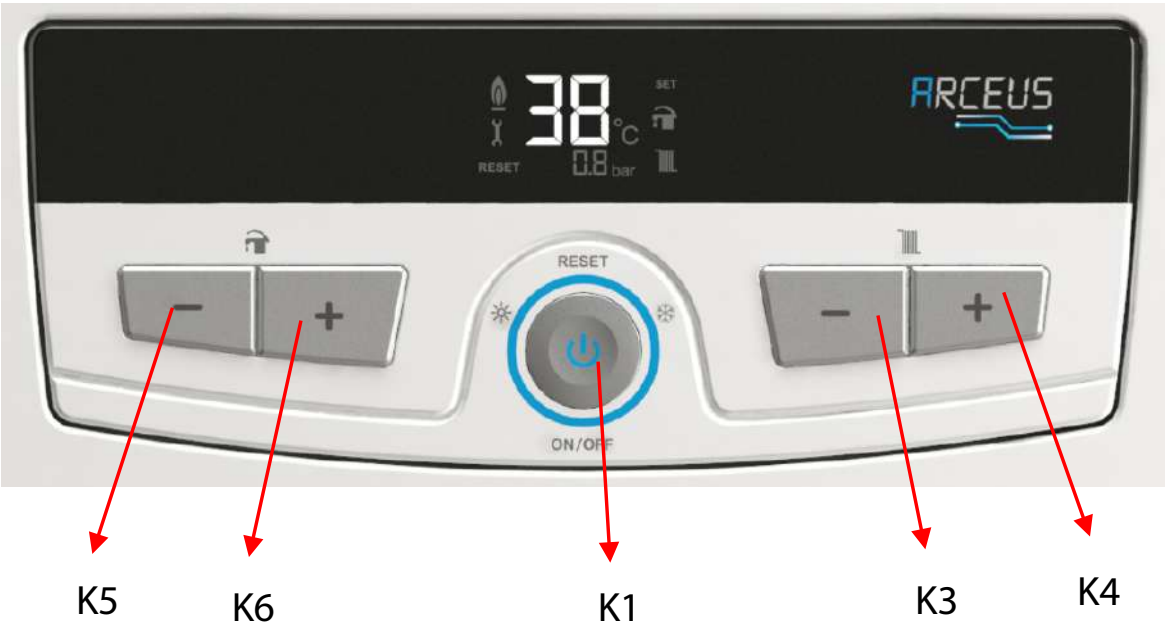

Figure 18 Control Panel View

11.1 Functions of Buttons

The control panel consists of the relevant elements as shown in figure 24 below.

Button Number	Button Name	Function
K4	CH Plus	- Increases central heating set temperature - Increases password value at parameter menu entry - Increases parameter value - Indicates information value - Indicates error history value
K3	CH Minus	- Reduces central heating set temperature - Reduces password value at parameter menu entry - Reduces parameter value - Indicates information value - Indicates error history value
K6	DHW Plus	- Increases domestic water set temperature - Allows for selection between parameters, information, error history, and clear error history menus - Confirms the password at parameter menu entry - Increases parameter number - Shows information number - Increases fault history number
K5	DHW Minus	- Reduces domestic water set temperature - Allows for selection between parameters, information, error history, and clear error history menus - Confirms the password at parameter menu entry - Reduces parameter number - Shows information number - Reduces fault history number
K1	Mode	- Allows for selection between STANDBY MODE, SUMMER MODE, and WINTER MODE when shortly pressed. - Resets error - Allows skipping the test mode - Allows skipping the AP function - Directs to the service menu when pressed for 5 seconds - Allows access to the selected sub-menu in the service menu - Exits from the parameter menu with changes saved when pressed for 5 seconds, - Exits from the error history menu when pressed for 5 seconds
K3 & K4	CH+ & CH-	Switches to test mode when pressed for 5 seconds

11.2 – LCD Screen

LCD screen display icons described here below.

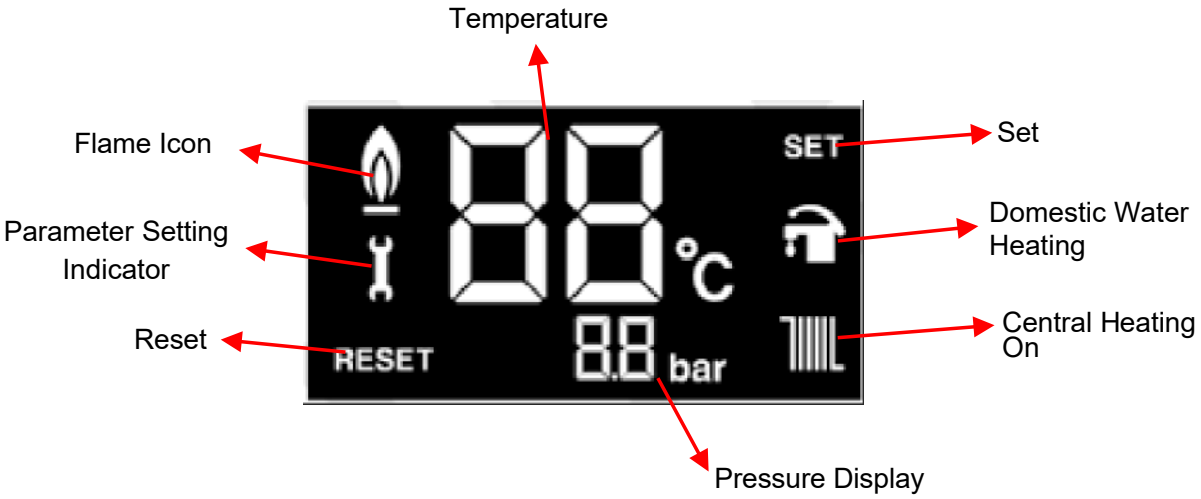

Figure 19. Description of Symbols

10.3- Operation Modes:

10.3.1- Standby Mode (Off Mode): It is the mode in which the device can be set to standby mode. In this mode, central heating and domestic water heating demands cannot be met.

10.3.2- Summer Mode: In this mode, the device does not perform central heating but does domestic water heating if there is a demand.

10.3.3- Winter Mode: In this mode, the device performs both central heating and domestic water heating if there is a demand.

10.3.4- Domestic Water (DHW) Comfort Mode: In this mode, water in the heat exchanger is kept at the domestic water set temperature and thus can be supplied at the desired temperature when the domestic water is turned on. While heating the water in the heat exchanger in comfort mode, tap icon on the screen flashes twice a second to inform the user that Comfort Mode heating is in progress. At the same time, “CO” letters are shown on the pressure indicator field. Comfort mode can be activated by pressing K5 and K6 buttons together for 5 seconds when the device is in ECO mode.

10.3.5- Domestic Hot Water (DHW) Eco Mode: At the times that hot water demand is not expected (e.g. holidays etc.) or more economic use is preferred, ECO mode prevents the water in the exchanger to be heated and provides a more economic use of the device. When the ECO Mode is active “EC” letters are shown on the pressure indicator field. ECO mode can be activated by pressing K5 and K6 buttons together for 5 seconds when the device is in Comfort mode.

10.3.6- No-Frost Mode: During the winter season, when the installation water temperature falls below 6℃, the no-frost mode function is activated and the device continues to operate until the installation water outlet temperature rises to 15℃. In order for the freeze protection function to work, the following conditions must be checked and ensured by the customer:

CAUTION: Do not press the RESET button while the device is in AP

- The power supply of the device must be on.
- The radiator valves must be open.
- The system water pressure must be appropriate.
- The freeze protection function helps protect your device but does not protect your installation.
- If the device is not to be operated in places where there is a risk of freezing, it is necessary to drain the water or use an anti-freeze agent.

10.4- Error Preventive Functions

10.4.1- Anti Freeze Protection: During the winter season, when the water temperature of the installation drops below 6ºC, anti freze protection is activated and the device keeps on heating until water temperature reaches to 15ºC. Below conditions must be provided and controlled by the customer for anti freze protection to work properly:

- Power supply of the device must bu connected
- Radiator valves must be open
- Water pressure of the system should be proper
- Anti freze protection function does not protect your installation, it protects the device
- If the device will not be operated in locations where there is a risk of freezing, the water of the device should be drained and antifreeze solutions should be used.

10.4.2- Pump Anti-Blocking Function: In situations that the pump is not turned on for 24 hours straight, pump is turned on for 5 seconds to prevent it to be stuck. This function is active in error status and stand by mode.

10.4.3- 3 Way Valve Anti-Blocking Function: In situations that the 3 way valve is not turned on for 24 hours straight, 3 way valve is turned on and changes position for 10 seconds to prevent it to be stuck. If a heat demand occurs during this procedure, anti blocking function is interrupted and the valves takes the position of normal working condtion. This function is active in error status and stand by mode.

10.4.4- Maintenance Reminder Function: After the time period that the device stays connected to the power upply reaches 8760 hours (1 year), the customer is informed that the annual maintenance time has come by flashing “ASE” characters and steady alarm icon on the screen. During this notification, the functionality of the device does not change. If the customer confirms this notification by pressing K1 button, timer is reset and the reminder does not appear for another 8760 hours.
In case the customer has periodic maintenance service, service resets the clock and 8760 hour period starts over.

12-ERROR CODES AND DESCRIPTION

ERROR TYPE	DESCRIPTION	ERROR CODE
Limit Thermostat Protection Error	This error is displayed if the temperature read by one of the central heating outlets or return temperature sensors is above 107°C. The error must be reset when the temperature reduces to 85°C.	E03
Faulty contactor feedback	If a false feedback is received even though the contactor should not be active, this error is displayed. A RESET operation is required after the error is corrected	E04
Central Heating Return Temperature Sensor Error	This error is displayed if the central heating return temperature sensor is short or open circuit, or damaged. Domestic water and central heating demands are stopped. When this error is cleared, normal operation begins.	F33
Central Heating Outlet Temperature Sensor Error	This error is displayed if the central heating outlet temperature sensor is short or open circuit, or damaged. Domestic water and central heating demands are stopped. When this error is cleared, normal operation begins.	F35
Too Frequent Error Reset Error	This error is displayed when 5 error resets are performed within 1 hour. Domestic water and central heating demands are stopped. This error can only be cleared by disconnecting the power to the mainboard.	E13

Low Water Pressure	The water pressure parameter FP11 is at a low level. This error is displayed if the water pressure is less than FP11/10 bar. When the water pressure is greater than (FP11/10+0.4 bar), the error is automatically cleared.	F37
Outdoor Temperature Sensor Error	This error is displayed if the outdoor temperature sensor is short or open circuit, or damaged. Domestic water and central heating demands are stopped. When this error is cleared, normal operation begins.	F39
High Water Pressure	The water pressure parameter FP12 is at a high level. This error is displayed if the water pressure is greater than FP12/10 bar. When the water pressure is less than (FP12/10-0.2 bar), the error is automatically cleared.	F40
Water Pressure Sensor Error	This error is displayed if the pressure sensor is short or open circuit, or damaged. When this error is cleared, normal operation begins.	F47
Solar Boiler Tank Temperature Sensor Error	This error is displayed if the solar boiler tank temperature sensor is short or open circuit, or damaged. Domestic water and central heating demands are stopped. When this error is cleared, normal operation begins.	F50
Solar Panel Temperature Sensor (PT1000) Error	This error is displayed if the solar panel temperature sensor (PT1000) is short or open circuit, or damaged. Domestic water and central heating demands are stopped. When this error is cleared, normal operation begins.	F51
CH flow NTC probe - CH return NTC probe swap test failed	If CH flow NTC probe, CH return NTC probe swap test fails, this error is given. RESET action is required in order to reset the failure.	E80

13-WARRANTY AND SERVICE

Warranty Registration

Scan the QR code to register your warranty or visit www.ecaboilers.co.uk

For Full Terms and Warranty Conditions visit **www.ecaboilers.co.uk.** The full terms and conditions must be strictly followed in order to manufacturer's warranty valid.

TERMS AND CONDITIONS FOR WARRANTY of ECA Boiler:

1.The appliance has warranty period against product failures in condition that the instructions and precautions in the documents delivered with the product are obeyed. These documents are operating-installation manual and service (includes maintenance operation) manual. The warranty period will not be extended in case of repairing or replacing any product or part. Manufacturer might introduce additional warnings/documents in case needed and deliver with the product. These documents are also binding for the products delivered with the additional documents.

2.The appliance has been used for which it is designed. Heating system inline with product capacity etc.

3.The installation must be carried out only by a registered installer. Benchmark Commissioning checklist must be completed and left with the householder for future reference. Boiler must be registered by either installer or homeowner within 30 days of installation to validate warranty. Should this condition not be met the period of warranty will extend to only 12 months from date of manufacturing on the boiler data plate (in case proof of purchase or benchmark commissioning checklist is not available).

4.At the end of each 12 month period, the boiler must be serviced by an authorized registered engineer according to service manual provided with the boiler. After service operation, Benchmark service record sheet must be completed and left with the householder. Should this condition not be met the boiler warranty will lapse.

5.If the boiler suffers a mechanical or an electrical breakdown please contact your authorized engineer on +44 800 640 9988

Our normal working times, excluding Bank Holidays are: 8am – 5pm Monday to Friday, 8am – 1pm Saturday,We will arrange for an engineer or appointed contractor,to inspect and repair, or where in our sole opinion repairis not economic, arrange to replace the boiler.

6.We will not accept or reimburse the costs of any third party who undertakes any work carried on the product or fits parts, unless approval is given by the means mentioned in point 5 such work in advance of it being carried out.

7.The boiler has to be installed at an accessible area where Engineers can perform servicing without health and safety risk.

8.Cupboard installations must provide minimum working clearances as detailed in the installation manual. Homeowner will provide removal of cupboards, kitchen units or trims in order to gain access for service.

9.The warranty does not apply:
a.If the boiler is removed from its place of installation and/or installation interfaces have been changed without our prior consent.
b.E.C.A will not accept responsibility for damage caused by faulty installation, neglect, misuse or accidentaldamage, the non-observance of the instructions contained in the service manual.
c.To any defect, damage or breakdown caused by the installation and maintenance of the CH system.
d.Noisy boiler, cold spots on radiators, sludge in pipes and poor circulation of the central heating system caused by any damage due to scaling, sludge or blockages as a result of hard water, scale, deposits, damage,aggressive water or sludge due to corrosion. Subsequently maintenance and cleaning of the system.
e.If the contact procedure defined in point 5 is not adhered to
f.To any other costs or expenses caused by or arising due to the breakdown of an E.C.A. Boiler.
g. Damage caused by faulty installation , theft, tampering, neglect, misuse, accident, fire, flood, explosion, lightning, storms, earthquake, frost or other bad weather conditions.
h. To any costs incurred during delays in fixing reported faults.
i. Costs of each annual maintenance, including parts such as seals or electrodes replaced at this time
j. Any problems caused by inadequate supply of services such as electricity or water to the property.

k.The boilers which are not installed and set up strictly in line with the installation instructions supplied with them (including the requirement to clean the system and add corrosion inhibitor in line with BS7593:1992).
l.where spare parts other than E.C.A. parts have been used in any service or repair. In this case, the warranty for such products is not valid furthermore.
m.Theft or attempted theft
n.Self-maintenance tasks such as re-pressurizing and resetting the boiler, bleeding excess system pressure and thawing frozen condensate pipes.
10.Visits by the service personnel would be charged to customer if;
a)any failure caused by contaminated water in the system
b)the boiler is not accessible or an engineer cannot gain access to the property
c)a fault cannot be found.
d)Benchmark commissioning sheet or equivalent control document is not available.
e)Failure to cancel an agreed appointment prior to our engineers visit at least before 12 noon on the day preceding the agreed appointment in order to arrange an alternative date.
f)The boiler is outside the period of warranty or any warranty ending condition mentioned in point 9 occurrs.
g)the fault is not product related, or alternatively if the fault is due to an installation error or because the system requires cleansing. Our engineer will advise you of this on the day and we reserve the right to charge an inspection fee.
11.The customer is responsible for the following points during visits by the service personnel;
a.The customer is has to be available to be contacted 30 minutes prior to the appointment. If not, our engineer will proceed to attend the appointment.
b.You are responsible for providing adequate parking for our engineer.
c.Our engineers are entitled to work in a smoke free environment and as such, you are required to ensure that the engineer is not exposed to active smoking whilst he is within the property.
d.It is your responsibility to ensure that pets are away from the area where the engineer needs to work
e.We reserve the right to cancel an appointment and to retain an inspection fee should legal parking not be provided, or if we are unable to obtain clear and safe access to the property or product, or if we have reason to believe that the health and safety of our engineer cannot be guaranteed.
f.If chargable works are required, we will not service until payment is made.
g.We reserve the right to not fulfill an appointment, should the necessary spares be unavailable, if the product is subject to recall or if the product has become obsolete and removed from our current product list.
h.For all engineer visits out of warranty we will normally ask for payment details (credit/debit card) prior to booking an engineer appointment. These details will be used to reserve our charge on your account. Once the engineer appointment is concluded this charge will then be debited from your account.
i.You are required to provide telephone contact numbers to enable us to contact you in the course of arranging and fulfilling your appointment. In the course of arranging and fulfilling your appointment we may choose to contact you via phone, text, fax or e-mail.

Charges

- Servicing and Commissioning appointments are charged at a fixed price inclusive of VAT, with the price being dependant on the product. Spare Parts Guarantee
- Any parts fitted under one of the chargeable call types above are guaranteed for one calendar year against defective workmanship and defective components.
- If we fit replacement parts or replace a boiler it will not extend the period of the warranty. All replaced parts or boilers will become the property of E.C.A.
- If your service visit was done on a fixed charge basis and it becomes evident, within 30 days of the original appointment, that your product has not been successfully repaired then we will return to repair the product free of charge, but subject to the same terms and conditions. If however, a new fault has developed since the original appointment, then we reserve the right to charge for the second appointment in line with our terms andconditions.

This boiler warranty is offered in addition to the rights provided to a consumer by law. Details of these rights can be obtained from a Trading Standards Authority or a Citizen Advice Bureau.

We reserve the right to update or amend these Terms and Conditions at any time and its decision in relation towarranty claims shall be final.

Your guarantee is provided to you by **ARD London (registered in England with company number +44 800 640 9988 or +44 20 3978 1212) of** Guarantor – ARD London , Adres: 15 / a Raven Road London E18 1HB

Data Protection

Your details will be kept safe and secure, only used by us or those who partner with us, and will not be shared with anyone else. By submitting your details, you are telling us that you are okay with this and that you agree with our privacy notice. You can of course, change your mind at any time. If you have given us permission, your details may also be used by us or third parties for other marketing purposes. We and the third parties (if applicable) may contact you by mail, telephone or email. If you no longer want your data to be used by third parties or by us for marketing purposes, please contact us.

ADDITIONAL RECOMMENDATIONS by ECA to CUSTOMER TO HAVE HIGH HEATING PERFORMANCE:

Make sure that the heating system is clean. Power flushing is the most efficient and effective method of cleaning a central heating system. The principle is to create a powerful fresh water flow under controlled conditions to remove debris from the system. By connecting the power flushing unit to the heating circuit in place of the system pump, boiler or radiator the system can be thoroughly cleaned of lime scale and corrosion debris. Without using correct water treatment, corrosion debris will accumulate in the boiler causing.
Lime scale deposition cause up to 30% of the system's electric consumption being wasted. The noise of boiler increases as deposits of sludge and scale build-up in an unprotected boiler. The deposits gathering in the waterways of the boiler are causing the heat transfer loss and flow noise.

In your heating system use proposed inhibitors as Fernox and Sentinel.

We also advice to use magnetic cleaners for your heating system.

Performing the maintenance once a year during the warranty period and periodically before the winter season after the warranty expires ensures safe use, saves fuel and extends the useful life of the boiler. Make sure periodic maintenance is strictly performed by E.C.A. Authorized Services.

14-ANNEXES

15.1 Characteristic Curve of Water Pressure Height of The Pump (Pump Head- Flow Rate)

Graph 2

15-SPARE PART LIST

 **EXPANSION VESSEL** 7006907924	 **MOTORIZED VALVE** 7006902880	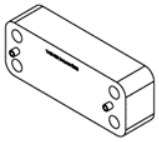 **PLATE HEAT EXCHANGER** 7006991264	 **6 KW HEATER RESISTOR** 7006250004	 **9 KW HEATER RESISTOR** 7006250005
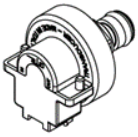 **WATER PRESSURE SENSOR** 7006952680	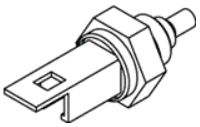 **IMMERSION TYPE NTC** 7006995165	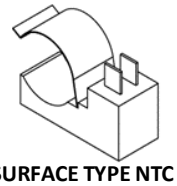 **SURFACE TYPE NTC** 7006907505	 **SAFETY VALVE** 7006990316	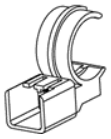 **FLOW SENSOR GROUP** 7006985271
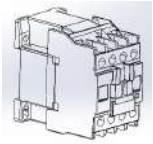 **18A CONTACTOR** 7006250044	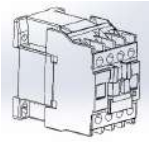 **40A CONTACTOR** 7006250024	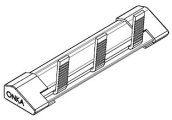 **CIRCUIT BREAKER BRIDGING** 7006250233	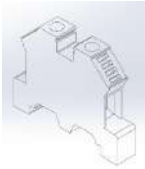 **GROUNDING TERMINAL BLOCK** 7006250033	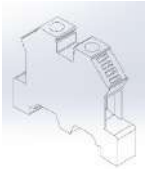 **NEUTRAL TERMINAL BLOCK** 7006250032
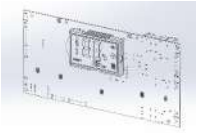 **CONTROL BOARD** 7006250015	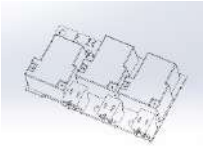 **RELAY BOARD** 7006250015	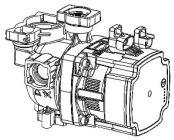 **CIRCULATION PUMP** 7006992426	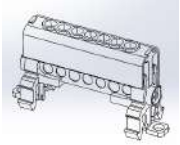 **NEUTRAL BUSBAR** 7006250098	 **OVERHEAT THERMOSTAT** 7006250153
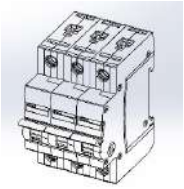 **16A 3P CIRCUIT BREAKER** 7006250100 **20A 3P CIRCUIT BREAKER** 7006250101 **25A 3P CIRCUIT BREAKER** 7006250102 **32A 3P CIRCUIT BREAKER** 7006250103 **50A 3P CIRCUIT BREAKER** 7006250104	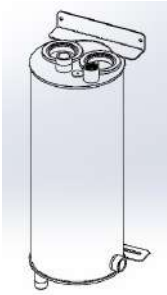 **3 RESISTOR TANK** 7006250001 **2 RESISTOR TANK** 7006250002 **SINGLE RESISTOR TANK** 7006250003	 **27 KW RELAY BOARD CABLE** 7006250300 **18-24 KW RELAY BOARD CABLE** 7006250302 **12-15 KW RELAY BOARD CABLE** 7006250301 **6-9 KW RELAY BOARD CABLE** 7006250300		

Table 10. Spare Part List

ELECTRIC BOILER SYSTEM COMMISSIONING CHECKLIST

This Commissioning Checklist is to be completed in full by the competent person who commissioned the boiler as a means of demonstrating compliance with the appropriate Building Regulations and then handed to the customer to keep for future reference.

Failure to install and commission according to the manufacturer's instructions and complete this Benchmark Commissioning Checklist will invalidate the warranty. This does not affect the customer's statutory rights.

Customer name:			Telephone number:		
Address:					
Boiler make and model:					
Boiler serial number:					
Commissioned by (PRINT NAME):					
Company name:			Telephone number:		
Company address:					
			Commissioning date:		
To be completedby the customer on receipt of a Building Regulations Compliance Certificate*					
Building Regulations Notification Number (if applicable):					
CONTROLS (tick the appropriate boxes)					
Time and temperature control to heating	Room thermostat and programmer/timer		Programmable room thermostat		
	Load/weather compensation		Optimum start control		
Time and temperature control to hot water	ylinder thermostat and programmer/timer		Combination Boiler		
Heating zone valves	Fitted		Not required		
Hot water zone valves	Fitted		Not required		
Thermostatic radiator valves	Fitted		Not required		
Automatic bypass to system	Fitted		Not required		
Boiler interlock			Provided		
Electric connections (fill the form)					
Voltage supply to the boiler	single phase		three phase		
What is the rating of circuit breaker to the boiler?			Amps		
Is the boiler supply line protected by an RCD?			Yes		
What size is the cross section of the power cord of the boiler?			mm²		
Have all mains connections been checked for tightness?			Yes		
Has a clamp meter test been carried out to verify the power rating?	Yes		No		
Has the electrical installation been tested and certified?			Yes		
The system has been installed and commissioned in accordance with the manufacturer's instructions			Yes		
ALL SYSTEMS					
The system has been flushed and cleaned in accordance with BS7593 and boiler manufacturer's instructions			Yes		
What system cleaner was used?					
What inhibitor was used?		Quantity		litres	
Has a primary water system filter been installed?		Yes		No	
CENTRAL HEATING MODE measure and record:					
Maximum capacity current per phase				Amps	
Central heating flow temperature				°C	
Central heating return temperature				°C	
COMBINATION BOILERS ONLY					
Is the installation in a hard water area (above 200ppm)?		Yes		No	
If yes, and if required by the manufacturer, has a water scale reducer been fitted?		Yes		No	
DOMESTIC HOT WATER MODE Measure and Record:					
Maximum capacity current per phase				Amps	
Cold water inlet temperature				°C	
Hot water has been checked at all outlets	Yes		Temperature	°C	
Water flow rate				l/min	
ALL INSTALLATIONS					
The heating and hot water system complies with the appropriate Building Regulations			Yes		
The boiler and associated products have been installed and commissioned in accordance with the manufacturer's instructions			Yes		
The operation of the boiler and system controls have been demonstrated to and understood by the customer			Yes		
The manufacturer's literature, including Benchmark Checklist and Service Record, has been explained and left with the custom			Yes		
Commissioning Engineer's Signature					
Customer's Signature					
(To confirm satisfactory demonstration and receipt of manufacturer' literature)					

*All installations in England and Wales must be notified to Local Authority Building Control (LABC) either directly or through a Competent Persons Scheme. A Building Regulations Compliance Certificate will then be issued to the customer.

benchmark COLLECTIVE MARK
THE MARK OF QUALITY FOR THE INSTALLATION, COMMISSIONING AND SERVICING OF DOMESTIC HEATING AND HOT WATER SYSTEMS

© Heating and Hotwater Industry Council (HHIC)

www.centralheating.co.uk

SERVICE RECORD

It is recommended that your heating system is serviced regularly and that the appropriate Service Interval Record is completed.

Service Provider

Before completing the appropriate Service Record below, please ensure you have carried out the service as described in the manufacturer's instructions. Always use the manufacturer's specified spare part when replacing controls.

SERVICE 01		Date:
Engineer name:		
Company name:		
Telephone No:		
Engineer register No:		
Record:	At max. rate:	Amps
	At min. rate: (Where Possible)	Amps
Comments:		
Signature		

SERVICE 02		Date:
Engineer name:		
Company name:		
Telephone No:		
Engineer register No:		
Record:	At max. rate:	Amps
	At min. rate: (Where Possible)	Amps
Comments:		
Signature		

SERVICE 03		Date:
Engineer name:		
Company name:		
Telephone No:		
Engineer register No:		
Record:	At max. rate:	Amps
	At min. rate: (Where Possible)	Amps
Comments:		
Signature		

SERVICE 04		Date:
Engineer name:		
Company name:		
Telephone No:		
Engineer register No:		
Record:	At max. rate:	Amps
	At min. rate: (Where Possible)	Amps
Comments:		
Signature		

SERVICE 05		Date:
Engineer name:		
Company name:		
Telephone No:		
Engineer register No:		
Record:	At max. rate:	Amps
	At min. rate: (Where Possible)	Amps
Comments:		
Signature		

SERVICE 06		Date:
Engineer name:		
Company name:		
Telephone No:		
Engineer register No:		
Record:	At max. rate:	Amps
	At min. rate: (Where Possible)	Amps
Comments:		
Signature		

SERVICE 07		Date:
Engineer name:		
Company name:		
Telephone No:		
Engineer register No:		
Record:	At max. rate:	Amps
	At min. rate: (Where Possible)	Amps
Comments:		
Signature		

SERVICE 08		Date:
Engineer name:		
Company name:		
Telephone No:		
Engineer register No:		
Record:	At max. rate:	Amps
	At min. rate: (Where Possible)	Amps
Comments:		
Signature		

SERVICE 09		Date:
Engineer name:		
Company name:		
Telephone No:		
Engineer register No:		
Record:	At max. rate:	Amps
	At min. rate: (Where Possible)	Amps
Comments:		
Signature		

SERVICE 10		Date:
Engineer name:		
Company name:		
Telephone No:		
Engineer register No:		
Record:	At max. rate:	Amps
	At min. rate: (Where Possible)	Amps
Comments:		
Signature		

*All installations in England and Wales must be notified to Local Authority Building Control (LABC) either directly or through a Competent Persons Scheme. A Building Regulations Compliance Certificate will then be issued to the customer.

benchmark COLLECTIVE MARK
THE MARK OF QUALITY FOR THE INSTALLATION, COMMISSIONING AND SERVICING OF DOMESTIC HEATING AND HOT WATER SYSTEMS

© Heating and Hotwater Industry Council (HHIC)

PRODUCTION

EMAS MAKİNA SANAYİ A.Ş Organize Sanayi Bölgesi

3. Kısım Mustafa Kemal Bulvarı No:13 45030 MANİSA

Phone: + 90 236213 00 21

Fax: + 90 236 213 08 59

E-mail: emas@emas.com.tr www.emas.com.tr

SALES & TECHNICAL SUPPORT

Call Center Tel:+44 800 640 9988

Office Tel : +44 203 978 1212

Adress : 15 / A Raven Road London E18 1HB

Activating your quarantee is quick and simple , but really important!

Register at

www.ecaboilers.co.uk/warranty-registration

complate and return in the envelope provided

QR code

scan me

7006250495_1.0

*We reserve the right to make technical changes and improvements in our products without any notice.